JULY
2011

Aum Shinrikyo

Insights Into How Terrorists Develop Biological and Chemical Weapons

By Richard Danzig, Marc Sageman, Terrance Leighton, Lloyd Hough, Hidemi Yuki, Rui Kotani and Zachary M. Hosford

Center for a New American Security

Acknowledgments

This work was sustained by grants from the Alfred P. Sloan Foundation. We are especially grateful for the personal support and encouragement of Sloan officers Ralph Gomory, Paul Joskow and Paula Olsiewski. We also benefited from the helpful introductions from the Japanese government and would particularly like to thank Ambassador Ichiro Fujisaki and Minister Takeo Akiba at the Japanese embassy in the United States and Yukio Okamato (Okamoto and Associates) and Katsu Furukawa of the Research Institute of Science and Technology for Society (RISTEX) for assistance in Japan. Doreen Jackson and Takahiro Araki provided valuable translation assistance over the course of the project.

We are grateful to Seth Carus (National Defense University), Glenn Cross (FBI), David Flynn (Eire 3 Consulting), Peter Haaland (independent consultant), Brian Jackson (RAND Corporation), David Kaplan (independent journalist and author), Larry Kerr (Office of the Director of National Intelligence), Kyle Olson (The Olson Group), John Parachini (RAND Corporation), Ben Petro (National Security Council) and Erik Prentice (Office of the Director of National Intelligence) for their generosity in reviewing a draft of this manuscript and in some cases sharing materials with us. We emphasize that these individuals acted in a personal capacity and did not represent their organizations when they provided assistance.

Kristin Lord, Nora Bensahel, Patrick Cronin, Richard Fontaine and others at the Center for a New American Security (CNAS) provided invaluable feedback during an internal review process. Layout and graphic design work by Liz Fontaine at CNAS made the manuscript much more readable. We are grateful also to Philipp Bleek for invaluable research performed at the Center for Strategic and International Studies in the first stage of this project.

Finally, we want to express our gratitude to an unusual source, past members of Aum Shinrikyo, some of whom have been sentenced to death for their roles in murders committed by the organization. We have noted these sources of information in the manuscript, but want to record here that we owe a particular debt to Dr. Tomomasa Nakagawa who has been unstinting in his efforts to educate us. If this manuscript enhances understanding and thereby diminishes the threat of attacks of this kind, we will owe all who helped us a considerable debt.

Of course, the views presented in this report – and the responsibility for any errors contained within – reside solely with the authors.

Cover Image

Clean-up efforts following the March 20, 1995 sarin gas attack in the Tokyo subway system.

(CORBIS SYGMA)

TABLE OF CONTENTS

Summary of Observations		4
Preface		5
I.	Aum's Early Development and Turn to Violence	7
II.	Mass Violence and the Initiation of a Biological Weapons Program	16
III.	The Chemical Program and Multiple Sarin Attacks	27
IV.	Observations and Implications	33
Appendix A	Table of Aum Member Interviews	43
Appendix B	List of Correspondence with Aum Members	44
Appendix C	Biological Weapons Incidents Chart Provided by Tomomasa Nakagawa	45
Appendix D	Aum Chemical Weapons Attacks Provided by Tomomasa Nakagawa	46
Appendix E	Testing Sarin in Australia?	47
Appendix F	Aum's Sarin Production Process	49

JULY 2011

Aum Shinrikyo

Insights Into How Terrorists Develop Biological and Chemical Weapons

By Richard Danzig, Marc Sageman, Terrance Leighton, Lloyd Hough, Hidemi Yuki, Rui Kotani and Zachary M. Hosford

About the Authors

Richard Danzig is the Chairman of the Board at the Center for a New American Security, a consultant on terrorism to U.S. government agencies, and a member of the Defense Policy Board and the President's Intelligence Advisory Board.

Marc Sageman is an independent consultant on terrorism and the Advisor to the Deputy Chief of Staff of the Army (Intelligence) on the Insider Threat.

Terrance Leighton is a Senior Staff Scientist at Children's Hospital Oakland Research Institute and Chief Scientist at Science Applications International Corporation (SAIC).

Lloyd Hough is a Senior Research Scientist at Battelle in International Technology Assessments.

Hidemi Yuki was a former expert for the U.N. Security Council sanctions panel for al Qaeda and the Taliban.

Rui Kotani is a researcher on global issues including counterterrorism.

Zachary M. Hosford is a Research Associate at the Center for a New American Security.

AUM SHINRIKYO: INSIGHTS INTO HOW TERRORISTS DEVELOP BIOLOGICAL AND CHEMICAL WEAPONS

By Richard Danzig, Marc Sageman, Terrance Leighton, Lloyd Hough, Hidemi Yuki, Rui Kotani and Zachary M. Hosford

SUMMARY OF OBSERVATIONS

This detailed case study of Aum Shinrikyo (Aum) suggests several lessons for understanding attempts by other terrorist groups to acquire chemical or biological weapons. We provide the basis for these observations in the discussion that follows and return to them at greater length in the conclusion of this report.

1. **Aum's biological program was a failure, while its chemical program was even more capable than would have been evident from its successful release of sarin in the Tokyo subway system in 1995.** Though the reasons for this disparity are complex, a number of factors suggest that chemical weapons are likely to be more accessible than biological capabilities for terrorist groups intent on killing substantial numbers of people.

2. **Effectively disseminating biological and chemical agents was challenging for Aum.** Difficulties of this kind are likely to burden other groups.

3. **Accidents recurred in Aum's chemical and biological programs but did not deter pursuit of these weapons.**

4. **When Aum's top members transitioned to using violence, they readily brought other leaders down this path and effectively persuaded, isolated or killed dissidents.** There was no evident resistance to moving from conventional weapons to pathogens and chemicals.

5. **Though police pursuit of Aum was remarkably lax, even intermittent or anticipated enforcement actions highly disrupted the cult's efforts to develop chemical and biological weapons.** Even if it is not an effective deterrent, law enforcement pressure can substantially inhibit efforts to develop biological and chemical weapons.

6. **The key work on Aum's biological and chemical programs was conducted largely by the leadership group.** This made it easier to keep the program secret, but this secrecy significantly limited access to the skill sets available for weapons development. Other groups that seek to develop chemical and biological weapons are also likely to grapple with this tradeoff.

7. **Aum's hierarchical structure facilitated initiating and resourcing biological and chemical programs.** However, it distorted their development by focusing power and resources in the hands of some who were not well-positioned to make good judgments about the programs. We anticipate similar effects in other terrorist organizations.

8. **Even a retrospective assessment of biological and chemical weapons programs like this one is difficult and burdened with gaps and uncertainties.** Contemporaneous assessments of Aum's intentions and capabilities would have been much more difficult and, even if correct, partial understanding at particular junctures would probably have been misleading. Similar uncertainty is likely to be common when assessing other terrorist groups. Our expectations of intelligence, and the weight we attach to it, should be moderated accordingly.

9. **Aum displayed impressive persistence and produced successes despite its commitment to many bizarre ideas, its misallocation of resources and its numerous operational failures.**

10. **Significant failures preceded or accompanied Aum successes.** When we encounter terrorist pursuit of these weapons the failures may be less a source of comfort than a warning of activity that, if persistently, pursued may result in success.

PREFACE

By Richard Danzig, Marc Sageman, Terrance Leighton, Lloyd Hough, Hidemi Yuki, Rui Kotani and Zachary M. Hosford

The use of chemical and biological weapons by terrorist groups remains a potent risk to the United States and countries around the world. As we attempt to prevent and plan for such a possibility, however, we have few historical lessons to guide us. This report examines a rare example – the most ambitious known effort to date of a terrorist group seeking to acquire chemical and biological weapons – and attempts to distill conclusions about the technical, organizational and psychological dynamics behind this effort.

Sixteen years ago, a Japanese apocalyptic cult, Aum Shinrikyo, dispersed sarin, a chemical weapon, in the Tokyo subway system, killing 13 people and prompting 6,000 others to seek hospital treatment.[1] Before that, the cult developed other weapons and used, or tried to use, biological agents against six targets and chemical agents against 11 targets.[2] Although many of the cult's leaders and their accomplices were arrested, tried and sentenced to death for their roles in the subway attack, understanding of their activities remains incomplete.[3] This is particularly because extensive Japanese police investigations focused on developing court evidence relevant to the sarin attacks rather than on understanding Aum as a terrorist organization that engaged in a range of violent activities. Moreover, while litigation was proceeding, Aum members were not fully forthcoming about their activities.[4]

Three years ago, the lead author of this report, Richard Danzig, initiated inquiries of the Aum members incarcerated at the Tokyo Detention Center. With invaluable support from the Government of Japan and the Sloan Foundation, he then established relationships with Aum members who provided information about how the cult had proceeded, the difficulties it encountered, and its successes and its failings (both greater than had been previously realized).

An expanded team including the co-authors of this report returned to Japan for further interviews in 2010.[5] This report provides our insights.

We emphasize that our aims are limited. Others should and will study Aum and write more comprehensive accounts of the organization, its members and its many activities. We are interested in Aum is as a case study of the possibilities, paths and difficulties that a group encounters when it seeks to develop and employ biological and chemical weapons.

The initial three sections of this report describe Aum's membership, ideology and turn to violence; its biological weapons program; and its chemical weapons program. A final section discusses 10 propositions that we think were true for Aum and hypothesize are likely to be true for comparable groups that seek these weapons for terrorist purposes.

Our aim is to have this study enrich policymakers' and intelligence agencies' understanding when they assess the risks that terrorists may develop and use weapons of mass destruction.[6] We offer two caveats, however. First, we did not want to significantly enrich terrorists' understanding of the issues we discuss. Accordingly, after consulting with a number of advisors, we have obscured some details (including in diagrams) and withheld some information, particularly an appendix that describes Aum's method of making sarin. Appropriate readers may request this material from the Center for a New American Security. We hope that we have balanced properly the urge to educate and prepare against future attacks and the urge not to aid terrorists.

Second, we emphasize that our understanding is still imperfect. Many (though not all) of our informants were cult members sentenced to death. We believe that most were honest and candid with us. However, even if candid, our informants had their own points of view, deficiencies of memory and sometimes flawed information. One might fairly say that though our sources were prisoners, we are prisoners of our sources. Throughout the report, we have tried to identify contradictions, flag uncertainties and distinguish hypotheses from conclusions.

Beyond this, the conditions for our interviews and information gathering were difficult. Prison interviews were limited to an hour (initially, only a half hour), and tape recording was not possible.[7] Many matters were discussed in a mélange of Japanese and English, and only two members of our research team speak Japanese.[8] Scientific terminology compounded the difficulties of comprehension. Documentation was hard to come by. Many prisoners – most notably the head of the biology program – were unwilling or, under Japanese rules affecting sentenced prisoners, unable to talk with us.

I. AUM'S EARLY DEVELOPMENT AND TURN TO VIOLENCE

Aum Shinrikyo started as a peaceful cult that provided a livelihood to its founder, Chizuo Matsumoto, while purporting to help followers achieve enlightenment.[9] Matsumoto, born into an impoverished family in 1955, suffered from congenital glaucoma that left him with no sight in one eye and severe impairment in the other. Like his sightless older brother, he was sent to a special school for the blind. There, he acquired the reputation of being a bully and allegedly extorted money from his classmates. He later became an acupuncturist and a masseur in Kumamoto – both traditional trades of blind people – but in 1976 he was convicted of causing a bodily injury and fined 150 dollars.[10] Apparently, his trade did not satisfy his ambition and in 1977 he moved to Tokyo to further his education. At preparatory school to take the entrance exam for Tokyo University, he met Tomoko Ishii, four years his junior, whom he started to date and impregnated. They married in January 1978 against her parents' wishes.

Matsumoto failed his university entrance exam but opened the Matsumoto Acupuncture Clinic, which thrived, prompting him to open a pharmacy specializing in Chinese medicine.[11] At the same time, Matsumoto developed an interest in New Age religions and extrasensory perception, reading old Buddhist texts and joining the Agonshu sect in 1981. This sect, which had been created 12 years earlier, used modern methods of advertising such as ads in magazines and on its own television station. It preached strict adherence to Buddhist principles and encouraged followers to submerge themselves into the cult and cut off all contact with their families.

In June 1982, Matsumoto was briefly jailed and fined 2,000 dollars for violating the Drug, Cosmetics, and Medical Instruments Act.[12] The incident humiliated him. Matsumoto turned to intensified practice of yoga and reading about fortune telling, divination, mysticism, the human potential movement and the writings of Nostradamus.

An October 1990 file picture of Shoko Asahara, born Chizuo Matsumoto, the founder and former leader of Aum Shinrikyo.

(AFP/Getty Images)

In February 1984, Matsumoto broke away from Agonshu and opened a yoga school he called Aum Inc., in a small studio in Tokyo. His personality attracted a small coterie of followers, including frustrated gifted "office ladies" such as Eriko Iida and Hisako Ishii,[13] who were confined to clerical jobs and looking for a sense of greater significance or spirituality in their lives.[14] Other early students included young people from all walks of life.

These early followers became adept practitioners of Matsumoto's rigorous exercises and later rose in the organizational hierarchy because of their perceived ability to attain spiritual enlightenment

through them. Matsumoto lectured that he was a source of spiritual power and performed initiation ceremonies during which he pressed his thumb on an initiate's forehead, supposedly to convey positive energy and absorb negative energy.

The group was not yet religious – the emphasis was on enjoying yoga to develop psychic powers. In February 1985, *Twilight Zone*, a popular Japanese magazine dealing with fringe religions and therapies, carried a feature on Matsumoto, including a photograph of him appearing to "levitate" in the lotus position several inches in the air. This feature attracted a number of people searching for similar experiences.[15]

By the spring of 1985, Matsumoto had started to assert that he was a sacred warrior and hero, charged with saving the world. After a trip of self-discovery to a mountain in northern Japan, he added that he met an old man who warned him about a coming apocalypse and prophesized that the survivors would be benevolent *shinsen* (mountain hermits). On a trip to India in the first two months of 1986, he claimed to have met sages who predicted that the world was heading for catastrophe but were unable to provide him with appropriate spiritual guidance to assist him in his quest. Matsumoto decided to use his own ascetic techniques to save the world. He then formalized his group of about 35 followers into an organization called Aum Shinsen no Kai ("Aum Mountain Hermits' Society" or "Aum Mountain Wizards").

On the spiritual side, Matsumoto asserted that he sought to restore "original Buddhism" to the world. His first sermons affirmed the traditional aspects of Buddhist morality, invoking injunctions against killing and emphasizing the importance of detached self-control – avoiding inebriation and losing one's temper. Novices were urged to give donations for initiation and gradually to renounce the materialist and spiritually void society (symbolized by the United States) that was inevitably heading toward catastrophe. Matsumoto claimed that he could prevent a cataclysm through positive spiritual action, bringing about a new spiritual age that would reverse the materialist trend. He said that he needed to open centers around the world and to acquire at least 30,000 spiritually enlightened practitioners who would renounce the world. Matsumoto repeatedly used this theme of catastrophe or Armageddon to urge laypeople to join his organization.[16]

In September 1986, Matsumoto formed his first monastic community. Monks and nuns had to sever all ties to their families and friends and give everything they owned to Aum Shinsen no Kai to demonstrate their lack of attachment to the mundane world and their commitment to the community.

Matsumoto started buying plots of rural land to establish priestly communes, "Lotus Villages," that would form the basis of his utopia. This isolation bred an attitude of being special among the priesthood and probably incubated the arrogance Matsumoto and his followers displayed against non-priests. These monastic arrangements strained relations between Aum Shinsen no Kai and the outside world. Parents lodged complaints against the cult and were angry at "a religion" that took their sons and daughters – many of whom were minors – away from their families and appropriated their assets.[17]

This was a period of optimism and rapid expansion for the movement. In July 1987, the movement changed its name to Aum Shinrikyo ("Aum Teaching of Truth") and Matsumoto changed his name to Shoko Asahara. At the time, the cult had 1,300 members; a year later, about 2,300; and by late 1989, around 4,000. The number of its monks and nuns grew from three at the end of 1986, to 30 at the end of 1987, 117 at the end of 1988, and 390 at the end of 1989.[18]

In August 1988, Aum opened a commune at Fujinomiya, near Mount Fuji. The opening of this center coincided with a shift in Aum thinking from saving the population of the world to saving only the chosen few, namely, the Aum community. Even though Aum had expanded dramatically, it was well short of the 30,000 priests Asahara claimed were required to avert Armageddon. Now the path to spiritual enlightenment and salvation went through a special personal relationship with the guru. This also required "cloning the guru," because the large numbers of novices no longer allowed him to perform the initiation ceremonies.[19]

Because Asahara was the only source of spiritual power, Aum devised new techniques to provide positive karma to followers. At the suggestion of Seiichi Endo, who later ran Aum's biological weapons program, this was done through ingesting physical traces of the guru: vials of his blood that novices drank in the "Blood Initiation" rite (costing several thousand dollars) or glasses of his bath water in the "Miracle Pond Initiation" rite.[20] Aum claimed that Asahara's blood had been analyzed at Kyoto University's medical laboratories and found to contain a unique form of DNA. By drinking his blood, the followers could acquire some of this good karma.

Some forms of Buddhism, such as Zen Buddhism as practiced in Japan, adopt the view that draining bad karma from novice practitioners sometimes requires using physical force to purify, exorcise or drive spiritual pollutions and spirits away from the body. Asahara's wife, Tomoko Ishii, was probably the first to undergo an extreme form of this treatment in Aum. She had little interest in religion and did not participate in her husband's affairs. In mid-1988, Asahara ordered her to become a committed member of Aum, but she refused. He had her beaten 50 times with a cane and then thrown into isolation to "meditate" in darkness for seven weeks. After this ordeal, she complied and eventually rose to the highest level of enlightenment, second only to her husband. She later credited him for pushing her to do something that was good for her but that she would not have done without this treatment.[21]

In the latter part of September 1988, an Aum follower named Terayuki Majima accidentally drowned while doing some exercises. His death would have attracted negative publicity to the organization at the time when it was applying for status as a religious organization. Asahara convened his senior advisors, including Tomoko Ishii (his wife), Hisako Ishii (his mistress), Kazuaki Okazaki, Hideo Murai and Kiyohide Hayakawa. Asahara was later reported to have told them, "We have created a problem for ourselves. We have finally established momentum in our emancipation movement, but making a public disclosure will slow down the momentum. I believe making [a] public disclosure will create yet another problem. Please advise me about the best course of action."[22] It was obvious to his followers that he wanted to cover up the incident. Tomoko Ishii suggested not reporting it if the incident could go undetected; Hisako Ishii and Hayakawa agreed. Asahara then called the followers who were present at the scene and asked them for their opinions. No one opposed him.

A decision was made to cremate the remains at the holy fire, an altar previously used to burn fruits and vegetables as offerings to the gods. Hayakawa, Murai and Okazaki cremated the body. The remaining bones were crushed by Hisako Ishii and other senior female executives, and Hayakawa and Okazaki spread the ashes over a lake.[23] These actions constituted an illegal disposal of a corpse according to Japanese criminal law. It appears that this act, recognized as a serious breach of the law, established the senior Aum membership's first bond of criminality. It created a precedent of proceeding with what they viewed as their mission even when it required disregarding the law.

Sanae Ouchi saw the burning of the body and was shocked. She was very close to her brother Toshihiro Ouchi and told him about it. She had

Biographies of Key Aum Shinrikyo Members

Many of those who joined Aum came from universities where Shoko Asahara lectured. A brief description of the six members most relevant to the biological and chemical programs is helpful for understanding those programs and also for appreciating the nature of Aum.[24] They are listed in the approximate order they were recruited into Aum Shinrikyo. Together these members came to constitute the inner circle of leaders on scientific matters at Aum.

Hideo Murai

Hideo Murai, born in 1958, graduated from Osaka University in 1981 with a degree in physics. As one of his fellow students described him, "He made good grades, but was quiet."[25] He did some graduate work in astrophysics at the university, studying the X-ray emissions of celestial bodies, and then joined the research and development department of Kobe Steel. After two years, Murai became less interested in his career and was attracted by what he had read in an Aum publication on yoga and extrasensory perception. He got married and took his wife on a honeymoon to Nepal rather than the traditional trip to Hawaii. On his return in 1987, he quit his company and joined Aum as a monk.[26]

Fumihiro Joyu

Fumihiro Joyu was born in 1962 in Fukuoka, Japan and lived with his family in a Tokyo condominium. His father started an export-import business, but disappeared when it failed during Joyu's grammar school years. Joyu consistently stood at the top of his class. As a teenager, he enjoyed cartoon books, baseball and became fascinated by UFOs and supernatural powers. He liked to tell jokes, but sometimes displayed a violent temper. At Waseda University, he majored in electronic communication, belonged to the English Circle Club and enjoyed debating. As a graduate student at the same university he studied telecommunications, was an avid reader of *Twilight Zone* and, starting in the summer of 1986, he attended Aum seminars. After receiving his graduate degree in 1987, he joined the National Space Development Agency (at the time, Japan's equivalent of NASA), but a month later he resigned and became an Aum monk. He became well known for his relentless ascetic practice and quickly advanced through the ranks of the organization.[27]

Kiyohide Hayakawa

Kiyohide Hayakawa, born in 1949, was the only child of a factory employee. In school, he was helpful to his subordinates, but when things did not go his way he would resort to violence. Hayakawa attended Kobe University and studied cultivation of flowers and vegetables, belonged to the aviation club and had become a leftist militant by the late 1960s. After graduation, he studied agricultural engineering (greenbelt planning) at the graduate school of Osaka Municipal University. He was hired by a leading civil engineering firm and became responsible for developing golf courses and residential sites. He liked science fiction and books about supernatural powers, and was constantly reading them. After five years, Hayakawa moved to a design consulting firm in Osaka and married a woman two years his junior (they had no children). He joined Aum in 1986 after reading Matsumoto's book and established Aum's Osaka branch in 1987, turning down an offer from a prestigious firm in Tokyo in order to continue this work. He became one of its first monks when the priesthood was established and then became the main procurement agent for the cult.[28]

Seiichi Endo

Seiichi Endo was born in 1961 and attended Obihiro University of Agricultural and Veterinary Medicine. After graduating, he became a student at the Kyoto University medical school research department focusing on AIDS-related gene research at the viral research center. He joined Aum in 1987, became a monk in 1988 and later led Aum's biological weapons program.[29]

Tomomasa Nakagawa

Tomomasa Nakagawa was born in 1962 in Okayama, Japan and graduated from Kyoto Prefectural University of Medicine in May 1988 at the age of 25.[30] He believed he could achieve altered states of consciousness without training and was confused by these experiences, which he tried to understand by exploring Aum. He first joined Aum in February 1988, and his perceived ability to reach an altered state of consciousness brought him to the attention of Asahara. Nakagawa started his medical residency immediately after graduation, but a year later, on August 31, 1989, he became a monk and Asahara's personal physician. His responsibilities as a doctor, basic scientific knowledge and personal relationships gave him intermittent insight about Endo, Murai and Masami Tsuchiya's efforts to develop biological and chemical weapons.[31]

Masami Tsuchiya

Masami Tsuchiya was born in 1965. An introverted child with little social life, he had some déjà vu sensations that he could not explain. When he asked his teachers about them, he felt he received no satisfactory explanations. He also wanted to make sense of his religious feelings and started learning yoga. He wanted to go to the Himalayas to learn more about religion, but felt this was unrealistic and went to university instead. In the summer of 1986, during his third year at university, his girlfriend broke up with him. He intentionally cut himself from his shoulder to his hip and felt that this made his mental pain disappear. Although he first experienced severe physical pain, this too disappeared. He again tried to make sense of this experience. A friend took him to his first session at an Aum Shinrikyo *dojo* – a Japanese meditation hall – on April 23, 1989. He assumed a yoga position and while looking at a picture of Asahara had an "out of body" experience. Although he had his master's degree in chemistry (physical and organic) from Tsukuba University, he decided to stop going to school in June 1990. In July 1991, his parents learned about his absences and forced him to stay at home, though at the end of the summer, he escaped and took refuge at an Aum *dojo*. He became a monk on September 5, 1991, and spent the next year devoting himself to his spiritual advancement through exercises.[32]

All of the above individuals were intensely committed and were rewarded by Asahara with titles signifying spiritual achievement. Asahara was the only fully enlightened person, at least two ranks above any of his subordinates. At the highest rank for the subordinates, the title of Seidaishi was given to five individuals: Hisako Ishii (Asahara's mistress), Tomoko Ishii (Asahara's wife), Reika Matsumoto (their third daughter), Joyu and Murai. Just below them were seven individuals with the title of Seigoshi: Tomomitsu Niimi, Eriko Iida, Hayakawa, Endo, Tsuchiya, and two women who did not play a role in Aum's illegal activities.[33] They earned the trust of their leaders by demonstrating their willingness to undergo excruciating ascetic practices. Atop the Aum hierarchy, members were eventually assigned ministerial titles, mimicking a governmental structure, as shown in Table 1.

committed a serious infraction by breaching this secret and confessed her sin to Asahara, who had the reputation of being able to read minds. Asahara then confronted her brother, who freely admitted that he knew about it and promised that he would keep it secret.

Shuji Taguchi, the deceased's best friend, had witnessed his death and was aware of the cover-up. By February 1989, he had become disillusioned with Aum and decided to leave the movement. Asahara, who was afraid that Taguchi might inform the police about the death of his friend, tied up Taguchi with ropes in a container at the commune and summoned his senior male advisors – Murai, Okazaki, Tomomitsu Niimi, Hayakawa and Toshihiro Ouchi – to discuss the best course of action. He dispatched them to determine whether Taguchi still persisted in wanting to leave Aum. They did so and informed Asahara that it was still the case. Asahara ordered them to kill Taguchi. The five men returned to the container and strangled him with a rope. Afterwards, they burned the body.[34]

At his trial after the 1995 sarin attacks, Toshihiro Ouchi said that Asahara always used more than one person for each criminal activity. The offenders monitored each other's behaviors and were reluctant to go against the apparent consensus of the group. They each believed that if they had been asked to do something wrong, someone else would protest, "somebody here will do something."[35] Aum members were thus involved in numerous criminal activities without a strong sense of making individual decisions. The cold-blooded murder of Taguchi also apparently intensified the bond among the senior leadership.[36]

Asahara tried to provide them with a religious justification shortly thereafter. In a sermon on April 7, 1989, he advanced the concept of *poa*: if a person was piling up bad karma that would condemn him to eternal hell, it was necessary to "transform" the

TABLE 1: AUM'S SYSTEM OF MINISTRIES

Founder	Shoko Asahara
Household Agency	Tomomasa Nakagawa
Secretariat	Reika Matsumoto
Ministry of Commerce	Yofune Shirakawa
Ministry of Construction	Kiyohide Hayakawa
Ministry of Defense	Tetsuya Kibe
Ministry of Education	Shigeru Sugiura
Ministry of Finance	Hisako Ishii
Ministry of Foreign Affairs	Fumihiro Joyu
Ministry of Healing	Ikuo Hayashi
Ministry of Health and Welfare	Seiichi Endo
Ministry of Home Affairs	Tomomitsu Niimi
Ministry of Intelligence	Yoshihiro Inoue
Ministry of Justice	Yoshinobu Aoyama
Ministry of Labor	Mayumi Yamamoto
Ministry of Post and Telecommunications	Tomoko Ishii
Ministry of Science and Technology	Hideo Murai
Ministry of Vehicles	Naruhito Noda
Eastern Followers Agency	Eriko Iida
New Followers Agency	Sanae Ouchi
Western Followers Agency	Kazuko Miyakozawa

Source: Rex A. Hudson, *The Sociology and Psychology of Terrorism: Who Becomes a Terrorist and Why?*, Federal Research Division, Library of Congress, 1999, based on information from D.W. Brackett, *Holy Terror: Armageddon in Tokyo* (New York: Weatherhill, 1996): 104.

person spiritually so as to prevent a further slide into hell, to attain a good rebirth and to secure eventual salvation. It was acceptable for enlightened people to kill those in danger of accumulating bad karma in this life in order to save them in the next, thereby helping them to achieve salvation.[37]

Asahara reasoned that if he failed to gain control of the state through elections...he would go ahead with his plan of destruction.

In April 1989, Aum applied to Tokyo Prefecture for legal recognition under the Religious Corporations Law. Such recognition would give Aum numerous advantages, including tax breaks and legal protection from state interference. To qualify, a religious organization had to be in existence for three years, have its own facilities and be able to demonstrate that it behaved in a tolerant and law-abiding way, allowing people to freely join or leave as they wished. As a result of protests from parents of underage monks and nuns, Aum's application was initially denied. In response, Aum launched an aggressive campaign to overturn the decision. Aum priests hounded officials, sent letters of protest and demonstrated. They threatened a lawsuit against Tokyo's governor for unduly delaying an administrative decision. The prefecture caved in and granted Aum registration as a legally constituted religious body in August 1989.[38]

In 1989, Asahara returned to the study of apocalyptic literature. He decided that he would precipitate Armageddon rather than wait and become its victim. Casting himself as the New Christ, a messenger of God, Asahara told Fumihiro Joyu that they should prepare to change from a religious to a military organization.[39] In the impending February 1990 elections for the Diet,[40] however, Asahara saw an opportunity to take control of the Japanese state without first attacking society. Asahara reasoned that if he failed to gain control of the state through elections, then this was again a sign of God, and he would go ahead with his plan of destruction.[41]

Accordingly, in July 1989, Asahara announced that Aum would contest the elections. He established the Shinrito ("Supreme Truth") Party and put up 25 candidates, including Asahara and most of the senior members of the hierarchy, for Tokyo region parliamentary seats. There was a great deal of resistance among the rank and file, who had joined Aum precisely to get away from society. Asahara justified his decision at a general meeting of his priesthood in September 1989 by saying that time was short and Armageddon imminent. A grassroots strategy would no longer be sufficient; he needed to develop a political base and authority in order to avert Armageddon.[42]

The campaign started with strong expectations. Aum followers held rallies and performances, using balloons and stuffed dolls. But in October 1989, one of Japan's major weekly magazines published the first in a series of seven articles about the negative aspects of the cult including the exploitation of followers, breaking of families and bizarre initiation rites. The magazine received hundreds of calls from abandoned families which organized themselves into a protest group, the "Aum Shinrikyo Victims' Society," and retained civil rights lawyer Tsutsumi Sakamoto as its legal representative.

Sakamoto investigated the cult and discovered several cases of fraud, including the fact that Kyoto University had never tested Asahara's blood. Sakamoto denounced Aum on a radio show. In response, Aum followers spread leaflets near his

home accusing him of religious persecution. It appears, however, that Sakamoto simply wanted Aum to abandon some of its more harmful practices and to conform to those of more traditional religious orders. Hoping to reach an agreement with Aum, he invited its representatives to a meeting on the evening of October 31, 1989.[43]

The meeting was intensely antagonistic. Sakamoto ended it by saying that he was about to air his charges in public.[44] Asahara told Murai, Hayakawa, Satoru Hatamoto (Asahara's bodyguard and martial arts expert), Okazaki, Niimi and Tomomasa Nakagawa that "there was no choice but to *poa* him," and the senior members subsequently started planning Sakamoto's death.[45] Although Hisako Ishii, Asahara's mistress, was officially the number two person in Aum, Aum's leadership did not involve her in the "dirty work," probably because she was a woman. After her, Okazaki was the ranking member, but Hayakawa and Murai were strongly challenging him for that position.[46] At least one later report has suggested that some of the planners were enthusiastic about the plot as a means of showing loyalty and moving up in the organization.[47]

At the planning meeting, Hayakawa assumed the role of the leader. The group planned to make Sakamoto's murder appear as though he died from natural causes. Nakagawa – who presumably was included in this secret mission because he had medical training, even though he had been a monk for only three months – recalls that it was the first time he heard botulinum toxin discussed.[48] The conspirators, however, settled on killing Sakamoto during an ambush on his way home from work with an injection of potassium chloride. Murai prepared the syringe and gave it to Nakagawa, who was supposed to perform the injection.

The scheduled day of the assassination, November 3, 1989, turned out to be a holiday, so Sakamoto spent the day at home with his wife and one-year-old son. The conspirators then decided to break into

An illustration of a holding cell similar to the one in which Tomomasa Nakagawa was confined, created by a former mid-level member of Aum Shinrikyo, who was not prosecuted. The former Aum follower is now a member of the Canaria group, an organization created by lawyer Taro Takimoto, which has been supporting former Aum members since the murder of Tsutsumi Sakamoto.

(USED WITH PERMISSION)

Sakamoto's home in the early hours of November 4. They made such a mess of the attempt that they decided that killing all three members of the family would be necessary to avoid detection. The killings, however, prevented them from being able to conceal the deaths as natural. The Aum members gathered the remains of the victims and secretly buried them in different prefectures. When they reported back to Asahara, he was pleased. Asahara assured them that they had done the family a favor; their souls would be born again in a higher world. Some days later, he summoned the team again to his room. A top aide read aloud the Japanese Penal Code penalties for terrorism, which carried the death penalty. Neither Sakamoto's name nor the deed was again mentioned, but the message was clear.

Recalling this period from his prison cell two decades later, Nakagawa said that the murder made him "nervous and depressed."[49] He said that when Murai reported Nakagawa's state of mind to Asahara, Asahara ordered that Nakagawa be confined in a holding cell, barely big enough to permit lying down.[50]

Nakagawa says that he stayed in the cell for a month, during which time a video of Asahara speaking ran 24 hours a day (the video screen can be seen in the illustration).[51] Nakagawa's only human contact was with a couple who handed him food. By the end of his confinement, Nakagawa said that he had become "mentally stable." When asked if this was "effective treatment," Nakagawa responded that "it built my trust in Asahara." Nakagawa further recalls that another Aum member, Sadai Hashimoto, was also "upset" and "deeply depressed." Asahara successfully dealt with this situation, however, by holding Hashimoto in his arms. "He had the power to affect people in this way, he controlled Hashimoto's mind," Nakagawa stated.[52] We inquired whether Nakagawa was disturbed by anything that happened later. Did he have any regrets about other violence? His answer was: "Unfortunately, no."[53]

When the Sakamoto family's disappearance was discovered, relatives saw that Sakamoto's wallet was still intact and the apartment had not been robbed. They also noted that an Aum Shinrikyo badge had been found at the scene.[54] During this time, Asahara and several senior advisors, including some of the perpetrators, left Japan to visit a foreign office that Aum had earlier established in Bonn, Germany, so when the police came to interview him 16 days after the murder, he was not available.[55]

The Sakamoto murders had characteristics that were to recur in the cult's future biological and chemical attacks: an interchangeable approach to biological, chemical and conventional weapons; the clumsiness of much of the planning; the crude effectiveness, nonetheless, of the result; the absence of women from the planning group;[56] hands-on execution of the attack by generally senior members; containing knowledge among these members; only transitory moral scruples, if any, exhibited by the participants; responsiveness of members to their charismatic leader; and a delayed and easily distracted police follow-up.[57]

The Sakamoto disappearance stoked press antagonism toward the cult.[58] Aum-bashing developed into a common pastime. Despite this, Asahara confidently predicted victory in the parliamentary elections. The result was disastrous. Asahara received only 1,783 votes out of half a million cast, and he appeared to have been shocked when none of the Shinrito candidates was elected.[59]

The brief life of Shinrito was an unmitigated disaster for Aum. The campaign was extremely costly, about 7 million dollars, posing a serious short-term threat to the cult's financial stability. Okazaki (one of the murderers of the Sakamotos) absconded with 1.5 million dollars. He later negotiated a deal with Asahara to keep a portion of this in return for his silence.[60] Many monks, who had left the communes to campaign, defected after exposure to the real world and returned to their former lives.

The electoral rejection solidified Asahara's belief that the people at large were not worthy of salvation. On March 11, 1990, Asahara explained the loss in a sermon, referring to a dark international conspiracy involving Freemasons and Jews that was aimed at world dominion and at suppressing Aum. He prophesized great calamities to befall the population soon, such as natural disasters, nuclear explosions and attacks with biological weapons. The attitude that "the unenlightened" were not worthy became pervasive within the sect and facilitated the further acceptance of violence.[61]

II. MASS VIOLENCE AND THE INITIATION OF A BIOLOGICAL WEAPONS PROGRAM

Botulinum

When Asahara determined that Aum should kill Sakamoto and his family, he asked what would be the most potent poison. Murai reportedly responded: "[B]otulinum,"[62] the same toxin that in minute quantities is now used for cosmetic purposes but in larger, though still very small quantities, disables the nervous system. Without botulinum on hand, the cult turned, as described above, to other means to murder Sakamoto in November 1989.

After the electoral defeat in February 1990 and his return to an apocalyptic approach, Asahara ordered Hayakawa, Niimi, Endo and Murai to obtain some *Clostridium botulinum* (*C. botulinum*),[63] the bacterium that produces the botulinum toxin.[64] Presumably, Aum could have obtained *C. botulinum* in small quantities from culture collections under the guise of research – Aum, after all, ran a hospital. But instead, Endo went to the Ishikarigawa Basin in Hokkaido Prefecture,[65] to harvest the bacterium from the soil in the spring of 1990.[66]

This effort to collect rather than buy *C. botulinum* was consistent with other decisions by the sect to be self-reliant. Aum repeatedly attempted missions internally that its members could have achieved more efficiently by acquiring materials or services outside the organization. This approach, a widely cited tenet of the cult, may have reflected faith in Asahara, a desire for secrecy or a perception that self-made goods could be acquired faster and more cheaply.[67] It is not clear what Endo collected on and around Hokkaido, but Joyu recalled that Nakagawa and Endo ultimately[68] worked on at least five strains (that is, variants) of *C. botulinum*.[69]

The group attempted, according to Nakagawa, large-scale propagation of this material in two or three approximate cube-shaped fermenters.[70] These steel boxes[71] each measured 2 meters x 2 meters x 2.5 meters – i.e. 10 cubic meters – a volume capable of producing 10,000 liters if filled to capacity.[72] With perhaps 10 percent headspace to accommodate foaming from the media broth in which the bacteria were grown, each fermenter might be expected to yield about 9,000 liters of material. Nakagawa recalled that two or three of these "fermenters" were constructed and that from them approximately 50 batches were made.[73] We could find no record or recollection of the precise amounts of material that resulted, but a simple calculation confirms the recollection of participants that these amounts were huge. The yield from one production cycle of one fermenter (9,000 liters) would equal 9 metric tons and 50 cycles would yield the immense amount of 450 metric tons. However, this quantity should not be equated with weapons material. The product, a yellow liquid, would have consisted mostly of the media in which the *C. botulinum* was cultivated. The cult made no efforts to concentrate or purify the broth from the fermenters.

All indications are that the product, though voluminous, was not efficacious. Cult members recognized that no one died in their attacks. Indeed, when a member slipped and fell into a fermenting tank he nearly drowned, but did not show signs of disease.[74] Nakagawa attempted to evaluate the material scientifically by purchasing two to three thousand mice, exposing them to the material and using a botulinum toxin mouse assay to evaluate the results.[75] He believed that his tests revealed no toxic effects in the mice, but there was some ambiguity because some mice died.[76]

We think that any or all of five factors probably accounted for Aum's failure. At the outset, the cult may not have acquired an appropriate strain of *C. botulinum* capable of producing sufficient concentrations of active toxin. Then, Aum may not have achieved specific culture conditions

– such as an appropriate fermentation broth composition or an anaerobic (oxygen-free) environment – required for the production of toxin by *C. botulinum*. Moreover, if they did not establish or maintain sterile conditions in the improvised fermenters, other bacteria might have contaminated the fermenters that would have prevented or interfered with the growth of *C. botulinum*. Kenichi Hirose, the physics expert given responsibility for botulinum production under Endo, indicated that bacterial contamination tainted the botulinum production.[77] This assertion is supported by Nakagawa's recollection that he found *Bacillus [subtilis] natto,* an aerobic bacterium used to ferment soybeans in traditional Japanese food, in the *C. botulinum* product.[78] Further, if Aum did succeed in producing a toxin, it could have been lost or degraded during post-fermentation recovery and/or destroyed if the resulting preparations were not stored properly. Finally, the concentrations or mass of toxin that was disseminated simply may not have been sufficient to achieve any noticeable effect.

These issues notwithstanding, the cult employed three trucks[79] to spray this material at two U.S. Naval bases, Narita airport, the Japanese Diet, the Imperial Palace and the headquarters of a rival religious group.[80] At the same time, Asahara proclaimed that those who were not members of Aum could not be saved and would inevitably descend into hell. He called on Aum members to flee from the coming disaster and save themselves by attending a three-day seminar to be held on the island of Ishigaki, in the Ryukyu archipelago. He said that this would be a very important seminar and that all who could possibly attend should do so.

When the botulinum attacks failed, Aum leaders variously attributed this failure to a lack of virulence in the pathogen, recurring problems that interfered with the spraying equipment and poor prediction of shifting winds. Fortunately for Aum, these attacks went unnoticed. In contrast, the convocation on Ishigaki was a striking success. The seminar attracted roughly 1,000 attendees, many of whom used the occasion to renounce the world and become monks.[81] The readiness of followers to commit fully to Aum, even at a time when the movement appeared to be at its lowest ebb – suspected of murder and publicly ridiculed – heartened the group. As a result, now something of an equilibrium existed between Asahara's propensity for violence and his pursuit of more mainstream activities. For the moment, he pursued both.

The rapid expansion of Aum required more communal facilities. Therefore, in May 1990, Hayakawa, using dummy companies, bought 14 acres in Namino[82] and began building without the required permits.[83] Local residents were outraged when they discovered that the new owner was Aum, given its negative publicity from the electoral campaign and the suspicion caused by the Sakamoto affair. They prodded the police, who in October 1990 arrested the three Aum leaders responsible for the fraudulent purchase.[84]

Unknown to the police, local residents or even most Aum members, the cult's desire for land and buildings reflected Asahara's desire to manufacture chemical weapons. By the summer of 1990, Murai was building the Namino facilities and stocking equipment to manufacture VX and chlorine gas. The arrests scared Aum into believing that a police raid was imminent. The group dismantled the facilities and removed all traces of its effort to develop chemical and biological weapons.[85]

The arrested Aum leaders spent about 50 days in jail, during which hostility between them and the local authorities was exacerbated. The village blocked the commune's access to telephone, water and sewage; local shops refused to sell food to the cult; and Aum children were refused entry to schools on the pretext that their parents were not registered locally. The struggle

Timeline of Aum's Biological and Chemical Weapons Activities

1989

SPRING 1989
Seiichi Endo goes to the Ishikarigawa Basin, in Hokkaido Prefecture, to harvest *C. botulinum* bacterium from the soil.

1990

SUMMER 1990
Hideo Murai begins manufacturing VX and chlorine gas at the newly purchased Namino facility.

MARCH–JULY 1990
Aum produces several hundred metric tons of medium containing botulinum toxin and disperses it in Tokyo in 20 to 40 separate releases. These attacks fail and are not noticed.

OCTOBER 1990
The arrest of three Aum leaders for fraudulent land purchase frightens the group into removing all traces of chemical and biological weapons from the Namino facility.

1992

1992
Under Endo's leadership, Aum's biological program resumes, this time using *B. anthracis*, perhaps obtained through a contact at Obihiro University.

1993

MAY–JULY 1993
Aum produces some 20 metric tons of medium containing anthrax at Kameido and sprays it from that facility.

JUNE 1993
After returning from Russia, Murai tells Masami Tsuchiya that Aum is threatened by chemical attack and asks him to review analytical methods for producing chemical weapons.

JULY 1993
Tsuchiya produces first bench-scale batches of sarin.

JULY–AUGUST 1993
Aum produces between 10 and 20 metric tons of medium containing anthrax at the Mount Fuji and K2 facilities and delivers it by trucks in Tokyo, perhaps during 10 to 20 individual releases.

NOVEMBER 18, 1993
Aum produces botulinum toxin and growth medium (of an unknown quantity) at the K2 facility and disperses 20 liters of it from a car sprayer, targeting Soka Gokkai's Daisaku Ikeda. This attack fails.

Aum also uses sarin to attack Daisaku Ikeda, dispersing it from a separate sprayer (Aum's first sarin truck). This attack also fails.

~DECEMBER 20, 1993
Aum attacks Daisaku Ikeda again using sarin sprayed from converted truck in Yamanashi Prefecture.

For more information on Aum biological weapons attacks, see Appendix C.
For more information on Aum chemical weapons attacks, see Appendix D.

1994

MAY 9, 1994
Aum attacks anti-Aum lawyer Taro Takimoto with sarin, but fails.

MID-SEPTEMBER 1994
Aum attacks Takimoto with VX nerve agent.

NOVEMBER 4, 1994
Aum produces botulinum toxin in the Jivaka lab near Satyan 7, which is mixed into a glass of juice to be given to Takimoto. The attack fails.

DECEMBER 2, 1994
Aum attacks 83-year-old Noboru Mizuno, who had sheltered five escaped cult members, with VX nerve agent, injuring him.

JUNE 27, 1994
Aum targets the judges in an Aum-related case with sarin in Matsumoto, Japan. The judges survive, but seven others are killed and 144 are injured.

SEPTEMBER 20, 1994
Tomomitsu Niimi and others drive to journalist Shoko Egawa's apartment and introduce phosgene gas through the mail slot in the door at night.

NOVEMBER 26, 1994
Aum carries out an incomplete VX attack.

DECEMBER 12, 1994
Aum attacks Takahito Hamaguchi, a 28-year-old office worker and suspected police informant, with VX nerve agent, killing him.

1995

JANUARY 4, 1995
Tomomitsu Niimi attacks Hiroyuki Nagaoka, an anti-Aum activist, with VX nerve agent, injuring him.

MARCH 15, 1995
Aum produces botulinum toxin in the Jivaka lab near Satyan 7, and disperses it from three suitcases in the Kasumigaseki Station.

APRIL 30, 1995
Aum carries out a hydrogen cyanide (Zyklon B) attack at a restroom in an underground shopping center.

MAY 5, 1995
Aum attacks the Tokyo subway with hydrogen cyanide (Zyklon B), but the chemicals fail to mix as intended in the device and four are injured.

LATE JANUARY 1995
Aum attacks Ryuho Ohkawa with VX nerve agent.

MARCH 20, 1995
Aum uses sarin in an attack on Tokyo subway lines converging near the police headquarters at Kasumigaseki. Thirteen are killed and 6,000 are sent to the hospital.

MAY 3, 1995
Aum attempts a hydrogen cyanide (Zyklon B) attack, but abandons it before the dispersal equipment is set.

and related litigation absorbed great amounts of leadership time.[86] Because much of the work on weapons of mass destruction was done by the leaders themselves, the local struggle and litigation had the unintended effect of inhibiting the military program.[87] Conversely, however, the conflict at Namino and other locations heightened the cult's fixation on its enemies, its readiness to complain of persecution and its belief that it was facing a vast conspiracy intent on destroying it.

At the same time, Aum experienced significant internal changes. In the late 1980s, Asahara had been surrounded by strong women, such as Tomoko Ishii (his wife), Hisako Ishii (his mistress), Iida and Sanae Ouchi. These women had been among his earliest disciples and had collectively exerted a powerful influence. By 1992, perhaps simply for personal reasons,[88] it seems that this group had faded away from top decision-making.

The turn toward violence both assisted, and was assisted by, the rise of a male group around Murai that replaced these female advisors. It appears that most or all of these men had been science fiction enthusiasts in their youth and continued this interest as adults. The group was consumed with the idea that spiritual experiences could be verified, explained, tested and proved scientifically. Projects included creating an astral teleporter (an electronic device to clean one's "astral dimension") and the "Perfect Salvation Initiation" headgear (designed to transmit Asahara's brainwaves to his disciples and replace their own impure brain waves).[89] The group's interest in science also applied to the violent aspects of the cult. They talked about futuristic technologies of destruction, such as plasma weapons that could atomize human bodies, mirrors several miles across that would float in space reflecting the sun's rays so that they destroyed all life in the process, vast laser guns and other imagined means of destruction. It was presumed that many such weapons had been developed by the United States.

Asahara shared his scientists' fascination with pop science. Although blind, he would turn on television animation shows and have someone describe the scenes. Many of his prophecies and sermons were taken from these shows. A plan for an underwater city after World War III came from *Future Boy Conan*. Light Beam Satellite Cannon was taken from *Mobile Suit Gundam*, and Cosmo Cleaner from *Starblazers*. His talk of Freemasons was taken from the magazine *Mu*. One person testified, "Since we all knew the sources, we thought Asahara's ideas to be foolish."[90]

There did not appear to be a strategy for the choice or use of weapons of mass destruction, but simply a fascination with these tools and an attempt to bring them into reality. The interaction between Asahara and his scientists has been compared to kids playing in a school yard, excited by the prospect of building and using new technology for its own sake. Leaders often got bored with one "toy" if there were any difficulty involved and went on to the next one with passion. There are, however, instances of persistence and improvement. These included engineering and building fermenters and dissemination systems for biological weapons. The soundest generalization is that Aum took an erratic course, rather than adopting a methodical research and development program.[91] Different members pursued different projects with widely varying enthusiasms and organizational support. Not surprisingly, senior members had more leverage than those lower in the hierarchy. The resources and energy devoted to an effort related only tangentially to its merit.

In late 1992, Asahara returned to his military strategy, and his senior lieutenants followed suit. Asked to explain the transition, Nakagawa would only comment that "our activities depended simply on the mood of Asahara. There is no logical reason or explanation. He would say he heard God's prophecy and gave us orders."[92] Joyu could not identify a particular event that might

have triggered this transition.[93] He recalled that after traveling abroad to proselytize, Asahara scolded him for spending too much time on religion and not enough on *vajrayana* (military) activities. At another time, Asahara commented to Joyu that his television appearances, which were providing positive coverage of Aum, were the temptation of an evil world and prevented Asahara from fulfilling his destiny as Christ. He thought that society was trying to co-opt him, and he was not satisfied.[94]

Joyu recalled a meeting with Asahara that he believes occurred in early 1993 and included Murai, Hayakawa, Endo, Nakagawa, Naruhito Noda[95] and Masami Tsuchiya. They discussed amassing an Aum military force equipped with an ambitious array of weapons and the need to research guns, explosives, nuclear weapons and missile systems. Yet more fantastic propositions (UFOs, X-ray weapons and plasma weapons) were also raised. Asahara told them to expand their minds, let their imaginations soar, read books from science fiction and realize their visions as weapons. After the meeting, several groups were formed to study various weapon systems to be produced on a large scale.[96] Among their other efforts, Hayakawa and Yoshihiro Inoue, Aum's intelligence minister, started acquiring property in Western Australia with the intent of prospecting for uranium.[97]

In 1992, under Endo's leadership, the biological program resumed operations. This time, Endo turned to *Bacillus anthracis* (*B. anthracis*), the pathogen that causes anthrax, an easier subject to develop as a weapon than the botulinum neurotoxin. Before describing these anthrax activities, we observe, however, that after attempting to produce and disseminate anthrax, the cult returned to trying to produce the botulinum toxin in 1993.[98] The group constructed 200-liter drum fermenters for this purpose, as drawn for us by Nakagawa (Figure 1). This was a superior approach because the cylindrical shape of the barrels eliminated corners that were difficult to decontaminate and seal in the cubical fermenters originally used.

Using tons of material from this production process,[99] Aum undertook further attacks with *C. botulinum*. In November 1993, and in the fall of 1994, two individual assassinations of perceived enemies of Aum were apparently attempted, the first from a sprayer and the second by concocting a mixture with juice.[100] Finally, five days before the cult's fatal use of sarin on the Tokyo subway system in March 1995, the cult dispersed botulinum in the Kasumigaseki Subway Station.[101]

From 1992 through 1994 Endo persistently attempted to promote pathogens as a weapon of choice. In large measure we see this advocacy as tied to his personal status: He ran the biology program. Tsuchiya, a trained chemist, was a competitor once a chemical program was re-initiated and demonstrated success as described below. So, for example, the November 1993 assassination attempt of Daisaku Ikeda was apparently undertaken with both sarin and botulinum – the redundancy arising, in the view of contemporaries, because Endo wanted a basis for claiming at least a share of any credit.[102]

Anthrax

Endo's anthrax program opened a second, apparently easier to achieve, possibility for success with bio-weapons.[103] The pattern of this program was similar to that of the effort with *C. botulinum*. As with his earlier work on botulinum, Endo did not want to order anthrax from a culture collection. Nakagawa reports that, "[t]he idea of obtaining anthrax from [an] American [culture collection] was considered, but we thought we could be traced back for accountability."[104] At first, according to Nakagawa, Endo unsuccessfully attempted to steal a strain from a laboratory.[105] Later, Endo turned to an Aum sympathizer outside the cult but who was in a position that gave him access to anthrax.[106] Our informants did not know who this individual was or where he was.

FIGURE 1: ILLUSTRATION BY TOMOMASA NAKAGAWA OF A DRUM FERMENTER USED BY AUM TO PRODUCE BOTULINUM TOXIN

This illustration was included in a letter from Tomomasa Nakagawa to Richard Danzig dated August 4, 2010.

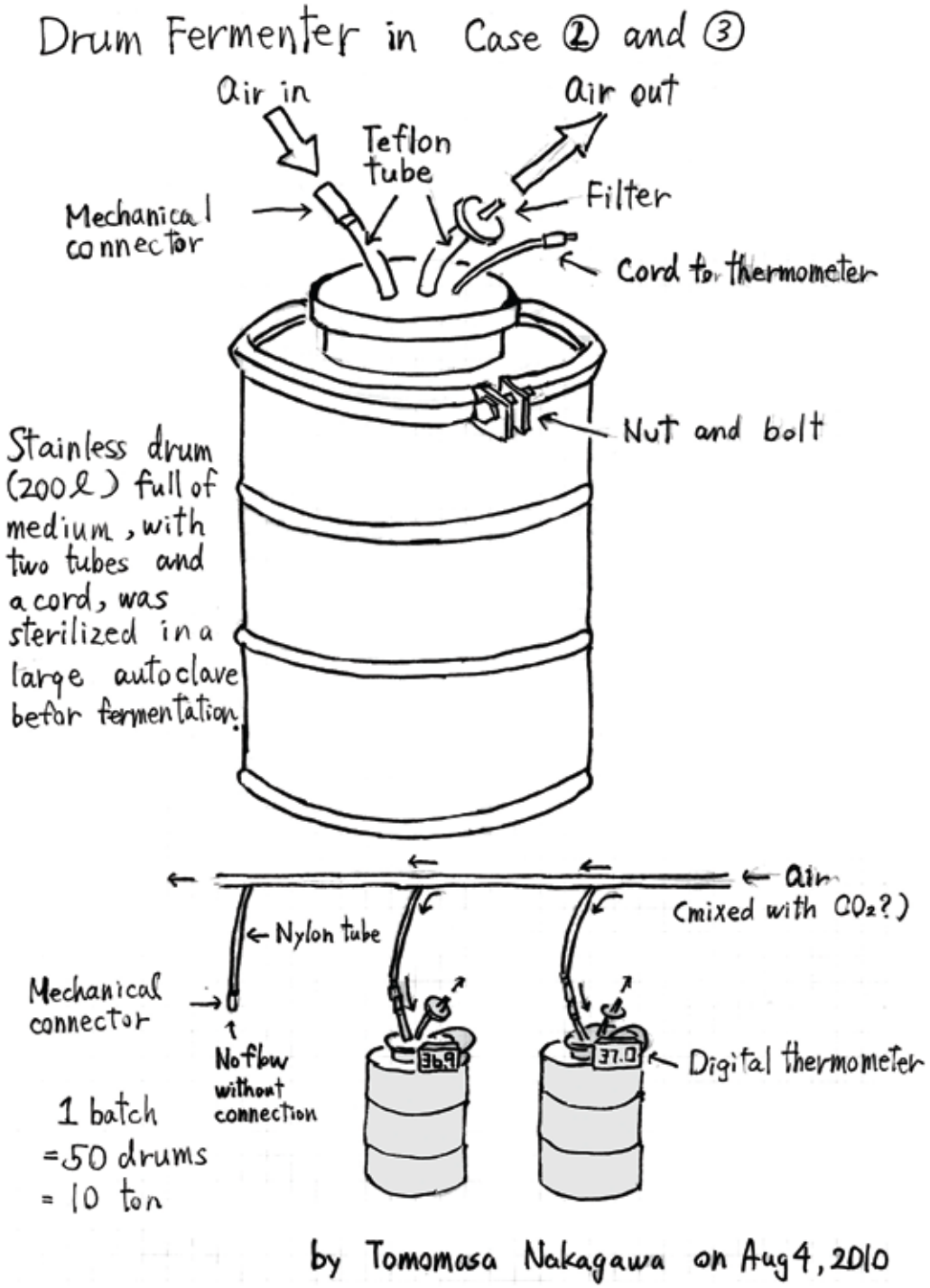

We speculate that the individual is likely to have been a friend from Endo's veterinary school days. Obihiro University of Agricultural and Veterinary Medicine is known to have a substantial anthrax collection.[107] Correspondence and an interview with the senior professor working with *B. anthracis* at Obihiro University outlined how this may have happened. The professor, Sou-ichi Makino, responded to our email query as follows:

> About anthrax, the situation should be very complicated. Before the incidence [of the Aum sarin attack], we (teachers in University etc) could have a [Sterne] vaccine strain (34F2 in Japan) and also Pasteur strains because we have a practical training for the pathogens to undergraduated [*sic*] students. Now, the situation became very hard to use anthrax strains for the practical training in the academic institutes. Probably, one member [of Aum] entered to study something in an academic research place, then brought out the vaccine strain illegally without any permission.[108]

Genetic analysis of a sample from Aum's 1993 anthrax attacks provides support for our hypothesis that Endo secured his material from Obihiro University. A 2001 article by Paul Keim and others documented that this sample was from the benign Sterne strain, which is principally used to vaccinate animals against the disease.[109] After conducting a further analysis at our request in 2010, Keim was able to be more specific: The genome sequence was extremely similar not just to Sterne but specifically to the 34F2 strain then available at Obihiro.[110] We emphasize that this information is only indicative, not conclusive. Sterne is the most common vaccine strain used worldwide for the vaccination of cattle and livestock,[111] and the 34F2 strain may be found outside of Obihiro University.

The more interesting question is why Aum employed a benign strain. Speculation has included hypotheses that Aum intended its anthrax dissemination only as a trial run, that someone sabotaged the effort or that an error was made when a benign rather than potent strain was obtained and that the error was never recognized or was ignored. Joyu and Nakagawa separately provided a different explanation. They were clear that all involved in this effort were well aware that they had a vaccine strain, but they believed that Endo could use "genetic engineering" (Joyu's statement of Endo's phrase) to convert this benign anthrax into a lethal form.[112] None of our informants claimed to understand Endo's methodology. Without access to Endo – who declined our requests for an interview – we cannot assure the accuracy of any explanation as to how he intended to effect this conversion, what his chances of success were and why he failed.

We have developed a hypothesis about the path that Endo may have been pursuing,[113] but emphasize that the supporting evidence is fragmentary. If we are not correct, the conversion may merely illustrate of what Endo could have had in mind. By this hypothesis, Endo obtained not only the Sterne strain but also the second vaccine strain – the Pasteur strain – mentioned by Makino as obtainable at Obihiro University.[114] The Sterne strain has the first, but lacks the second, of the two plasmids (pXO1 and pXO2, respectively) that are together required to produce an effectively virulent anthrax bacterium.[115] Endo may have realized that, conversely, the second (Pasteur) vaccine strain provides immunity while avoiding lethality by retaining the second plasmid and eliminating the first. Based on a 1989 publication by Russian scientists, Endo may also have been aware that if both benign strains were obtained, they could together be used to generate a virile strain containing both plasmids.[116]

The Russian paper describes the two methods by which a virulent strain could be generated from the two vaccine strains: cell-to-cell "mating" (conjugation) and transfer using a virus that infects bacteria (transduction). Moreover, in the later 1980s, scientists at Obihiro University

FIGURE 2: CAPSULATED AND NON-CAPSULATED STRAINS OF ANTHRAX

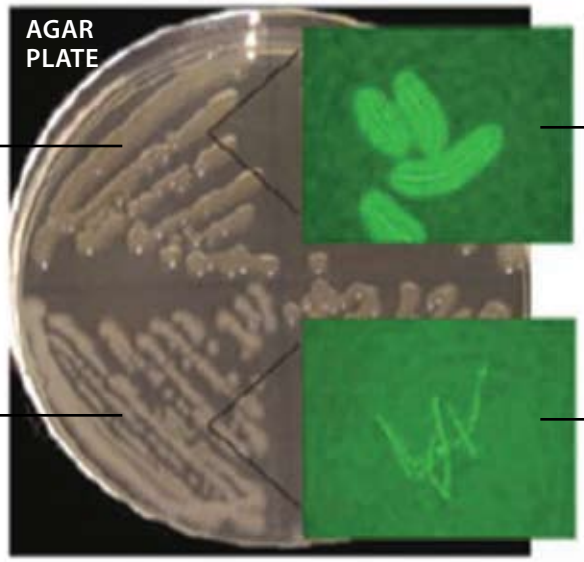

Source: T. Koehler, "Bacillus anthracis Physiology and Genetics," *Molecular Aspects of Medicine* 30, 6 (2009): 386-96.

had begun using a transduction technique for transferring the second plasmid into strains that contained only the first.[117] Theoretically the resulting fully virulent derivative strain could be selected on agar culture plates, screened for the capsule production phenotype when grown in the presence of elevated carbon dioxide levels (left panel, Figure 2) and confirmed by negative staining with light microscopic examination (right panels, Figure 2).[118]

Joyu reported that Endo invited him to look through a microscope and see that the "shape" of the bacteria indicated his success in transforming the vaccine strain into a virulent pathogen. Endo's comment (as reported by Joyu) about "shape" might refer to the presence of a capsule associated with the expression of the pXO2 plasmid. In this circumstance, the second plasmid generates a capsule that after staining appears under a light microscope as a barrier around the bacterium. With the appropriate agar plate culture conditions (high CO_2 atmosphere), this barrier can even be seen as shown above (Figure 2).[119]

Keim's analyses of the extant Aum sample show that the strain that was sprayed lacked the second plasmid. Accordingly, it appears that whatever path Endo pursued, he failed. This conclusion is supported as well by Aum's evident failure to kill anyone with its anthrax preparations.

As with the botulinum failure, possible reasons for Endo's lack of success with anthrax start with the likelihood that he was not able to produce a virulent strain. There are alternative explanations for why this might have been so. Perhaps Endo saw the proper path but did not obtain the necessary second vaccine strain. If he obtained this strain, he would have confronted a number of opportunities for error if he attempted to genetically transfer capsule genes to the Sterne vaccine strain. In an interview, Makino suggested that if Endo attempted transduction, he would have likely failed.[120]

Makino recalled that when he first started his capsule research program a skilled co-worker could not successfully utilize the Pasteur strain as a genetic transduction donor of pXO2. Before

he could successfully employ the plasmid transfer method, the co-worker had to spend six months in a leading laboratory at the Pasteur Institute to learn the nuances of the virus-mediated transduction methods. Even then, Makino described the transduction procedure as "very inefficient."[121] Because the pXO2 virulence plasmid is a relatively large piece of DNA to transfer, its transfer by transduction can be expected to occur at very low frequencies,[122] making it difficult to find the proverbial "needle in a haystack."[123] It is also possible that Endo succeeded in transferring the second plasmid to the Sterne strain, but that the second plasmid was lost in the course of large-scale production or storage of bulk material.

Both Nakagawa and Hayakawa separately told us that they suspected that Endo's anthrax was not potent when they and others inadvertently inhaled some and did not fall ill.[124] Others developed similar doubts when anthrax attacks were undertaken and failed, particularly in June and July 1993.[125]

As with botulinum, production and dissemination difficulties compounded the problems of generating an effective weapon. Following the botulinum pattern, the cult moved to mass production without any assurance of the potency of what it was producing. In 1992, 200-liter drums were used at a plant on Aum property in Kameido, Tokyo, apparently in production runs that involved 10 drums each.[126] We estimate that one production batch might have yielded about 1,800 liters of liquid slurry. No attempts were made to purify the resulting mixture. Because the media so dominated the slurry, it had a brown color and a pronounced putrid smell that the cult tried to alleviate with perfume.[127]

Disseminating the liquid was plagued by difficulties. The cult considered buying a high-powered sprayer from a European firm, but when Aum discovered that this would entail a two-month delay, Asahara ordered members to make the sprayer themselves. As in other instances, this reflected faith that the cult could achieve anything and everything by itself. However, the sprayer, according to Nakagawa, "broke down over and over again." For example, during an attack on a royal wedding parade, "the sprayer broke down at the very time we began to spray. The medium full of anthrax leaked from several pipes under the high pressure (500 atmospheres or more)."[128] During an effort to disseminate the material from the cult's dojo in the Kameido neighborhood of Tokyo, mechanical difficulties with the sprayer made it, in Nakagawa's memorable words, "spout like a whale." The smell was so bad that numerous complaints of foul odors from neighbors provoked police inquiries. As a result, the operation had to be moved to the cult's facilities at Kamikuishiki, a farming community at the foot of Mount Fuji.

Faced with these difficulties, in the summer of 1993 the cult adopted a different strategy: it sought to dry the slurry so as to be able to disseminate *B. anthracis* spores as a powder. We calculate that if the spores were separated in an optimal manner from the media and dried, this in turn would produce about 1.8 kilograms of purified weapons material.[129]

No doubt the process was suboptimal. Noda said that the drying process used an Aum Shinrikyo-made hot air roller dryer which he sketched for us (Figure 3).

The sporulated culture medium was introduced into the drying drum from the top. There was a hot air inlet at one end of the rotating drum and a vacuum outlet at the other. The drum was manually turned by using a handle, and the inclination of the drum could be adjusted to maximize the efficiency of the drying process. Noda could not remember if there were filters on the incoming or outgoing air. He reported that Murai and Niimi were in charge. Murai and Niimi took the final product, which was a gray powder, and sprayed it.[130] Nakagawa's impression was that the powder had been disseminated

FIGURE 3: ILLUSTRATION BY NARUHITO NODA OF THE RUDIMENTARY DRYERS USED BY AUM SHINRIKYO TO PRODUCE ANTHRAX SPORE POWDER

This illustration was provided by Naruhito Noda during a March 30, 2010 interview.

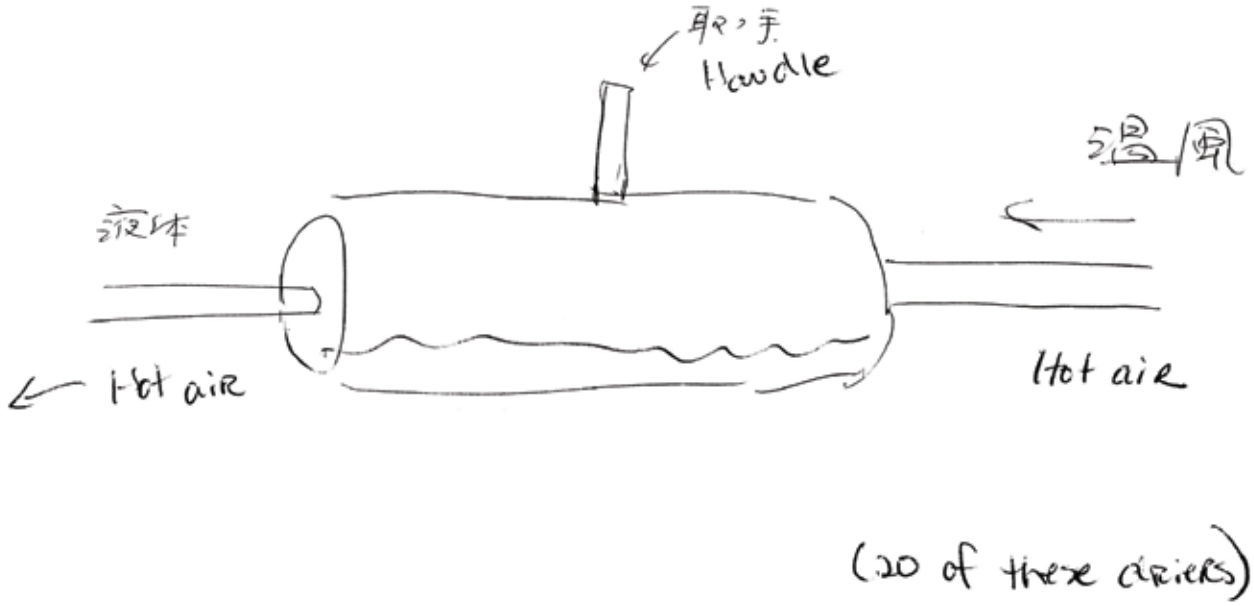

from a truck and supposed that it was released in the center of Tokyo.[131] It also resulted in failure.

This unbroken string of failures with botulinum and anthrax eventually convinced the group that making biological weapons was more difficult than Endo was acknowledging. Asahara speculated that American comments on the risk of biological weapons were intended to delude would-be terrorists into pursuing this path.[132] Endo persisted, arguing the spray devices had killed the anthrax.[133] But, as Nakagawa put it, "I beli[e]ve that Asahara had gradually begun taking chemical weapon[s] seriously and Endo's biological weapon lightly in August 1993."[134]

III. THE CHEMICAL PROGRAM AND MULTIPLE SARIN ATTACKS

Masami Tsuchiya was junior to Endo within the Aum hierarchy and occasionally was relegated to assisting him with the biological program. Endo's superior status was enhanced when Aum organized into ministries mimicking a governmental structure in 1994 (see Table 1) and Endo became "health minister."[135] Tsuchiya proved to be much more skilled than Endo, however, and when he worked on chemicals he often worked directly for Murai or Nakagawa.

Tsuchiya operated a small chemical laboratory at the cult's headquarters complex in Kamikuishiki.[136] The laboratory was established under Murai in November 1992, perhaps to assist in fabricating drugs to be used recreationally and in religious rites.[137] By the summer of 1993, Tsuchiya was also producing sarin. As Tsuchiya recalls events, in June 1993, after returning from Russia, Murai told him that the cult was threatened by chemical attack.[138] He asked Tsuchiya to "review analytical methods so if chemical weapons are used we can know what they are."[139] The coincidence in timing suggests that Russia's active chemical weapons program may have called Murai's attention to this weaponry.[140]

Tsuchiya says that he did not at first know what substances to research. He used the library at Tsukuba University for periodicals and keyword searches to identify chemical agents that could be used to attack Aum.[141] After completing the initial survey, Tsuchiya told Murai that he thought sarin would be the most cost-effective chemical agent. Murai subsequently directed Tsuchiya to produce some sarin for analysis to protect the community from potential attacks. Tsuchiya said he ordered the necessary chemistry equipment through Aum's official company without disguising the requests because he did not think of this project as being related to illegal activities. By June 1993, the small-scale synthetic chemistry laboratory equipment was installed and within about a month, Tsuchiya succeeded in producing small amounts (10 to 20 grams) of sarin.[142]

After Aum attacked the Tokyo subway system in March 1995, there were extensive discussions about the originality of Tsuchiya's sarin production methods. The first Tokyo police reports attributed great originality to the Aum process because they observed the sarin used for the subway attack was synthesized using N,N-diethylaniline (DEA) as an accelerant – an unprecedented step. In fact, however, as described below, this was an aberrational improvisation, not an improvement. Some have speculated that Tsuchiya may have derived the mainstream process from Russian methods.[143] He denies this, however, and we can find no evidence supporting this notion.[144] After examining each of the relevant steps, we conclude that the Aum sarin production process was neither more nor less than a shrewd adaptation of well-known sarin production procedures, all of which are derived from German organophosphate synthetic chemistry dating back to World War II.

After Tsuchiya's successful production of small quantities of sarin, Murai ordered Tsuchiya to make about 70 tons of the chemical.[145] Tsuchiya says he responded that he was reluctant to produce such a large amount.[146] Under any conditions, there was a practical difficulty. Tsuchiya was a research scientist; large batches would require constructing and administering a production facility, not just a research lab.[147] The Aum leadership promptly turned to creating just such a factory alongside their biological production facility at Kamikuishiki.[148] Aum labeled its major facilities "Satyan" (derived from the Sanskrit word for "truth") and numbered them sequentially.[149] The chemical plant was to be in Satyan 7.

As Nakagawa recalls:

> Murai, [Kazuyoshi] Takizawa and Tsuchiya started the design of the plant which was expected to produce 70 T[ons of] sarin in the building of Satyan 7 that had already been built. They also began to buy a great amount of chemicals for 70 T[ons of] sarin in August 1993.[150]

To purchase the required technical equipment and substantial amounts of chemicals, Aum created two dummy companies – both run by Niimi – under Hasegawa Chemical, an already existing Aum shell company.[151]

Work proceeded around the clock. By September 1993, the production facility at Satyan 7 was declared ready for occupancy.[152] However, this readiness appears to have been overstated. Perhaps because of the haste with which it was built, Satyan 7 never came close to the stated goal of 70 tons of sarin. As described below, it was capable of producing some 40 or 50 liters (that is, approximately 100 pounds) of the chemical. It eventually employed 100 Aum members and was equipped with 30-liter flasks with mixing and temperature control capabilities within enclosed protective hoods.[153] The photograph on the right conveys a sense of Satyan 7's size. A subsequent United Nations report estimated that the building and its contents cost 30 million dollars.[154]

Sarin Expanded Production and Dissemination

In October 1993, while Satyan 7 was coming online, Tsuchiya was ordered to produce one kilogram of sarin. Murai assigned four trusted insiders to work with Tsuchiya: Nakagawa, Kayoko Sasaki (Nakagawa's girlfriend), Murai's wife and a bodyguard. Tsuchiya says that he could not refuse because his helpers outranked him in the organization.[155]

By mid-November 1993, Tsuchiya managed to produce 600 grams of sarin, and by December

Aum's Satyan 7 sarin production facility in Kamikuishiki, Japan with Japanese police after the 1995 sarin attacks.

(KATSUMI KASAHARA/The Associated Press)

1993, he accumulated three kilograms with a purity of approximately 90 percent. Although Tsuchiya states that he did not know how this material was used, Nakagawa says that it was used in an attack on November 18 against Daisaku Ikeda, the leader of Soka Gakkai – a popular religious competitor of Aum.[156] The attack was ineffectual, but Aum made another attempt about 30 days later using a truck to disperse the sarin (Figure 4). In a letter to the authors of this report, Nakagawa described what ensued:

> In December 1993, Takizawa and several workers customized a truck ([two ton,] with cloth hood) into one for sarin evaporation by order of Murai. This was the first sarin truck. The evaporation system was to heat sarin in a steel box over an open gas stove fire. That was just a casual idea given by Murai who wanted to save time and workers' hands. Takizawa said to Murai, "This truck will catch fire during evaporation."[157] But Murai ignored what he said and ordered [him] to follow Murai's idea. The work took them 5 or 7 days [and] was finished one or two days before the attack. During the dissemination the truck caught fire as Takizawa had said. The driver, Niimi and the manipulator

FIGURE 4: ILLUSTRATION BY TOMOMASA NAKAGAWA OF THE FIRST TRUCK CONSTRUCTED BY AUM SHINRIKYO TO DISSEMINATE SARIN

This illustration was included in a letter from Tomomasa Nakagawa to Richard Danzig dated November 25, 2010. It has been edited to remove sensitive information.

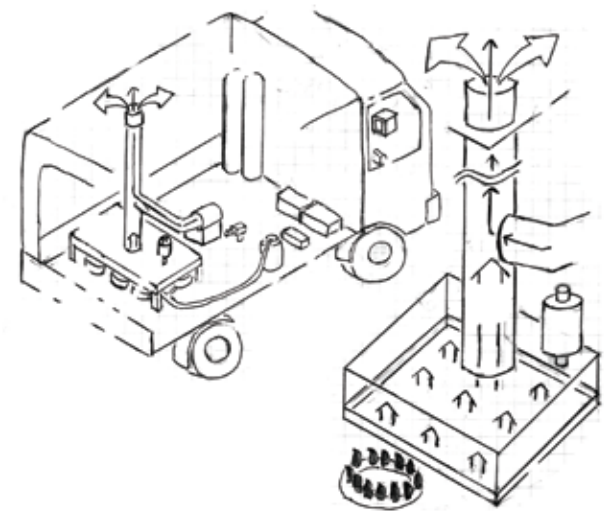

> of the evaporation system, Murai, were [in] it. They gave up the attack and they run [*sic*] away. Niimi was severely poisoned.[158]

Niimi was saved by an injection of the antidote atropine and pralidoxime iodine.[159]

The experience persuaded many within Aum of the efficacy of the sarin. The focus turned to large-scale production. Kazuyoshi Takizawa was placed in charge of sarin plant operations.[160] Tsuchiya felt that the plant was well run under Takizawa but operations were handicapped by the principals' limited knowledge of chemistry. Errors occurred. A leading example, according to Tsuchiya, was that in February and March 1994 Nakagawa added too much isopropyl alcohol during the difficult fifth and final step of the synthetic process.[161] This resulted in excessive temperatures, causing the mixture to contain an undesired byproduct[162] resulting in less pure sarin.[163] Moreover, the cobalt color in the glass flask dissolved into the reaction mixture, creating what became known as "blue sarin." Tsuchiya suspects that it had lower sarin purity than the material that he had made earlier.[164]

While these production efforts were undertaken, Tsuchiya was reassigned to numerous new research projects, each to run simultaneously with his sarin work. Between the fall of 1994 and the March 1995 subway attacks, he remembers manufacturing research quantities of: lysergic acid diethylamide (LSD); sodium pentothal; phencyclidine (PCP); methamphetamines; soman (another chemical agent, of which he produced about two to three grams); GF nerve agent; VX nerve agent (several times – he produced a total of about 200 grams); gunpowder; barbiturates (phenobarbital); mescaline; and catalysts for ammonium and nitric acid.[165] Some of these were used in assassination attempts. Nakagawa recalls a half dozen such attempts using VX nerve agent[166] and efforts after the Tokyo subway sarin attack to use hydrogen cyanide.[167] As these attacks were relatively minor, consistently unsuccessful and we have little information about them, we focus on the most significant effort – to use sarin as a means of killing numerous people.

The Matsumoto Sarin Attack

Around June 20, 1994, Asahara decided to assassinate the judges scheduled to decide a commercial dispute involving Aum because he thought that they would not provide a decision favorable to the group.[168] A week later, Aum members loaded 30 liters of sarin into a refrigerated delivery truck equipped with a vaporizing device consisting of a heater and a fan at the KG building in Kamikuishiki.[169] As indicated by the diagrams in Figure 5, the design of the second truck was considerably more sophisticated.

On the night of June 27, 1994, the truck reached Matsumoto and parked in a lot 37 meters west of the judges' residences. Vaporization started late

FIGURE 5: DRAWING BY TOMOMASA NAKAGAWA OF THE SECOND TRUCK CONSTRUCTED TO DISSEMINATE SARIN

This illustration was included in a letter from Tomomasa Nakagawa to Richard Danzig dated November 1, 2010. It has been edited to remove sensitive information.

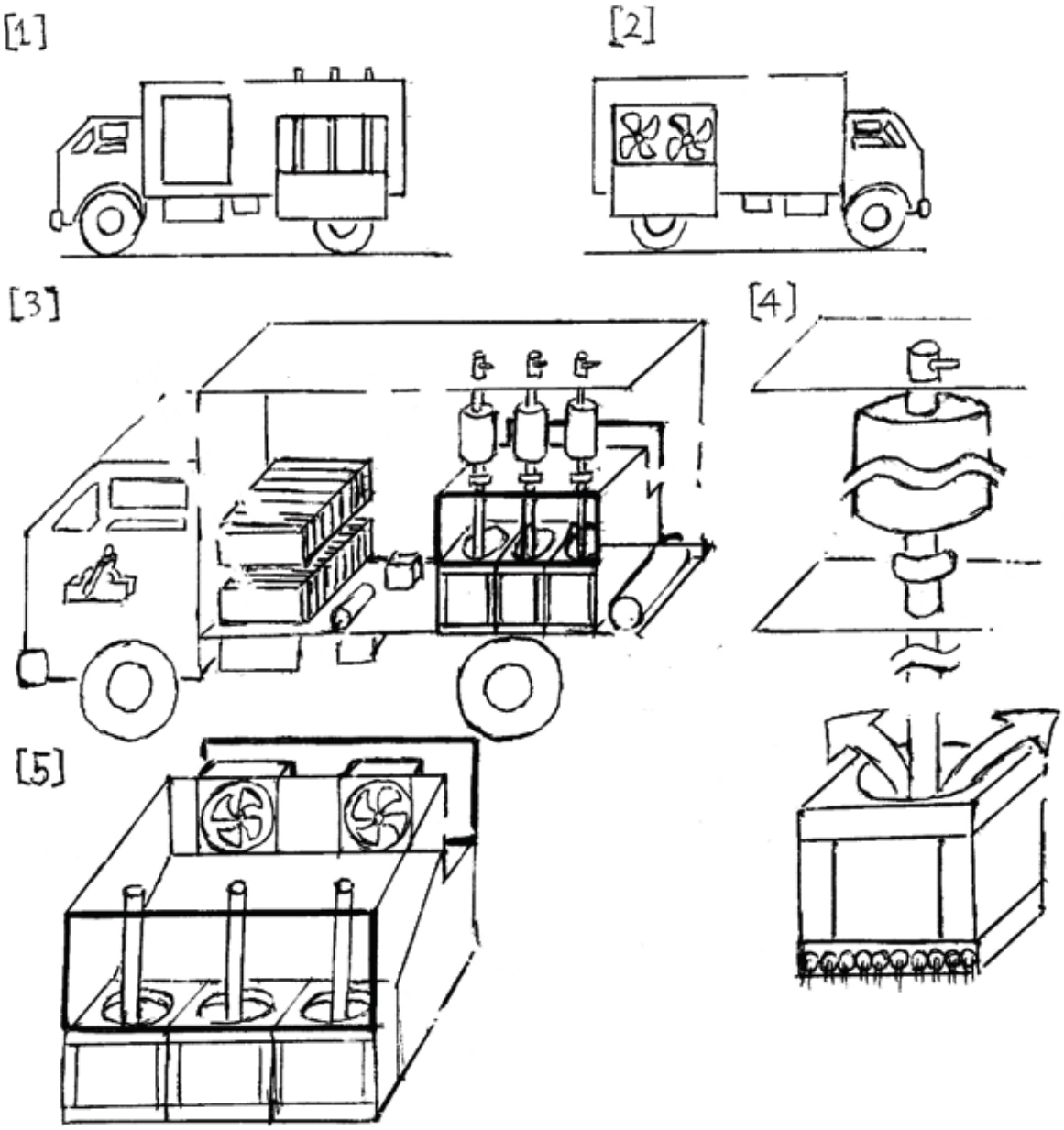

that evening and sarin gas initially escaped into the van before being directed toward the judges' residences.[170] The spraying continued for about 10 minutes, but a slight breeze shifted the sarin plume toward neighboring apartment complexes and houses. As a result, eight people died and 200 were injured in the Kaichi Heights neighborhood.[171] The Matsumoto police found herbicide chemicals at the home of one of the victims and focused its attention on him, ignoring the cult.[172] Later analysis showed that the sarin used in this attack had characteristics of the blue sarin described above.[173]

In July 1994, neighbors of the Aum's Kamikuishiki compound near Mount Fuji (see photograph, page 28) complained of foul-smelling fumes. Four months later, in November 1994, a production accident at the Satyan 7 Kamikuishiki sarin production facility caused a second release.[174] In response, police obtained soil samples from just outside the compound and identified the presence of methylphosphonic acid (MPA) and isopropyl methylphosphonic acid (IMPA). The former compound is associated with sarin degradation and the latter compound is considered both a definitive signature of a sarin production process and often indicates a production failure.[175]

On January 1, 1995, a news article was widely disseminated that a sarin compound was found in Kamikuishiki.[176] Nakagawa says that although he believed that Aum's production of sarin would eventually leak to the press, he was surprised that it had surfaced so early.[177] To avoid discovery in what was feared to be an impending police raid, Nakagawa's superiors in the cult ordered him to destroy all illegal chemicals, including sarin (of which some 20 liters was on hand),[178] VX liquid (about 100 to 200 milliliters), soman, narcotics and any advanced precursors to these substances. Endo was responsible for destroying the biological agents. To further disguise the purpose of Satyan 7, Murai put plastic sheeting on the exterior of the building and statues of Buddha at the entrance.[179] Nakagawa recalls that the destruction was hurried and that he did not sleep for the first three days. The process of destruction and disguise took until the end of February. During that time, Tsuchiya and other Aum members were prohibited from engaging in chemical weapon activities. They were destroying and hiding their research documents and equipment. Only Hayakawa knew where they were hidden.[180]

The Tokyo Subway Sarin Attack

Despite the available evidence of Aum's involvement with sarin production, police could not prosecute Aum without tying it to a particular murder, assault or kidnapping as no Japanese law prohibited manufacture of a poisonous gas. Fingerprint evidence linking an Aum member to a kidnapping, however, allowed the police to plan a raid on the Aum facilities on March 22, 1995.[181] Aum became aware of the impending raid and formulated a plan on March 18 to attack Tokyo subway lines in the vicinity of the Metropolitan Police Department on the morning of March 20 at a time when officers would be arriving for the 8:30 a.m. shift change. This desperate attack was presumably intended to initiate the apocalypse, both validating Asahara's prophecies and catalyzing Aum's seizure of state power.[182]

Tsuchiya was engaged in making mescaline but says that Endo asked him to begin producing sarin again on March 18. To facilitate this, Tsuchiya was given a sarin precursor (methylphophonic difluoride) that had been hidden by Nakagawa. Tsuchiya was surprised that the precursor existed, but he used the compound to make the sarin for the Tokyo subway attack.[183]

Recalling this last effort, Tsuchiya reports that the production of sarin in the last manufacturing process was aberrational – he did not have the correct organic base available to neutralize the acid produced during the synthetic process and therefore substituted the organic base DEA.

This modification produced sarin of lower purity, but the DEA, a brown-colored liquid, caused the normally colorless sarin to have a brown color. This came to be described as "brown sarin." The last manufacture was done in Endo's laboratory, and Tsuchiya did not know the amount produced or its concentration.[184] When asked about the purity of the previous sarin, he said that when he participated in the production of 600 grams and then in the subsequent 30 kilograms, it was nearly pure. He did not believe that Endo purified his preparation. The brown sarin was stored in a large container and then transferred into smaller bags. He said that Endo, Nakagawa and Seiji Tashita put the sarin in seven smaller packages.

Police reports indicate that the Tokyo subway attack involved five Aum team members with one getaway driver for each team and 11 bags of sarin – one subway rider with three bags and four subway riders with two bags each. During the attack, the perpetrators successfully punctured eight bags, with the police later recovering intact an additional three bags.[185]

Chemical forensic analysis of the brown material (the color a consequence of the DEA) from the unpunctured bags identified 35 percent sarin (isopropyl methylphosphonofluoridate), 10 percent hydrogen methylphosphonofluoridate, 1 percent diisopropyl phosphorofluoridate, 0.1 percent diisopropyl methylphosphonate, 37 percent DEA (the organic base) and 16 percent hexane (the solvent).[186] In sum, the ad hoc sarin synthetic process (35 percent purity) for the Tokyo subway attack produced a weapon only half as potent as the mixture utilized in the Matsumoto attack (70 percent purity).[187]

Nonetheless, the mixture was potent. The initial casualty figures used by the prosecution during Asahara's trial on October 24, 1995, list 11 deaths and 3,796 injuries from the Tokyo subway attack, and those figures have since been increased to 13 deaths and 6,252 injuries.[188] "Injuries" in these reports are broadly defined as essentially anyone who sought compensation. Those significantly physically affected probably are only in the hundreds. But among those, problems with psychomotor and memory functions persisted over seven years following exposure.[189] Electroencephalogram anomalies persisted in the exposed population for at least five years,[190] and long-lasting brain dysfunctions in victims of the Tokyo subway incident were observed six months to three years after the incident.[191]

Following the Tokyo subway attack, Aum carried out several smaller, spasmodic attacks, but in essence, the cult's biological and chemical weapons programs were over.

IV. OBSERVATIONS AND IMPLICATIONS

This report studies one idiosyncratic group that developed weapons of mass destruction 15 to 20 years ago in political and technological contexts that other groups will not experience. Moreover, as we have emphasized, our sources of information about Aum are limited and our understanding is imperfect. Despite these qualifications, we think that this is the most accessible and informative opportunity to study terrorist efforts to develop biological and chemical weapons. In this light, we offer 10 observations about Aum and infer from this study hypotheses that those concerned with other terrorist groups may wish to consider.

1. Aum found a successful path for developing chemical weapons but did not develop effective biological weapons. Its experience suggests that chemical weapons capabilities are more accessible than biological capabilities as a means of killing substantial numbers of people.

It has been widely recognized that Aum went further with its chemical program than its biological work. The cult's chemical capability, however, has been understated because of the fortuity that it had to resort to low-purity sarin in its hastily arranged subway attacks. This reduced the number of casualties and diminished recognition of what Aum could achieve. Moreover, although Russian information may have aided planning the factory production system, we see no evidence of a Russian contribution to the cult's method of sarin production. For the most part, the chemical program was both independently developed and efficacious. Aum's activities illustrate how readily a terrorist group can produce chemical agents when operating under permissive conditions.

Why was Aum more successful at developing chemical than biological weapons? Many have observed that Tsuchiya was impressively skilled as a chemist and Endo unimpressively skilled as a microbiologist.[192] Indeed, Endo's training, interrupted by his joining Aum, was as a virologist not as a bacteriologist, while in Aum's weapons program he worked with bacteria. The disparity in relevant skills undoubtedly affected the success of their respective programs. But we think that more pervasive, less serendipitous factors shaped Aum's greater success at chemistry than at biology.

First, Aum's history suggests that with access to the relevant literature, a generally skilled chemist can produce a chemical weapon, whereas a generally trained biologist is likely to have more difficulty propagating and conserving an unfamiliar pathogen. The distinction between explicit (book) knowledge and tacit (hands-on) knowledge may be helpful here.[193] Developing biological weapons appears to require more tacit knowledge, while chemists may be adequately positioned to develop weapons after consulting relevant documentation. Although he made some improvements and innovations of his own, Tsuchiya mastered the basics of sarin production and a number of other hazardous or illicit chemical compounds primarily through reading scientific journals. He was able to communicate recipes that Murai and others could employ with reasonable efficiency (though they made some errors and had accidents). By contrast, while Endo's efforts to identify, harvest and grow toxigenic *C. botulinum* and to create fully virulent *B. anthracis* also relied on library research, the work evidently required more expert training and experience. Moreover, moving from one pathogen to another required essentially restarting the program. Even if Endo had developed the requisite skills, it would have taken him (or anyone else) considerable effort to pass them to others. Producing biological materials is a modern craft or an art analogous to playing a sport or speaking a language. Though some aspects can be mastered just from reading a book, others relevant to a weapons program cannot be acquired this way with rapidity or assurance.

A second factor, closely related to but distinguishable from the first, is that movement to scale seems notably easier for chemical than for biological or nuclear weapons. All these weapons first require laboratory science, but to be weapons of *mass* destruction they must transition to larger-scale production. Both the chemical and biological programs had problems when they sought to move from laboratory to production-scale activity. Tsuchiya produced three liters of sarin. Murai wanted much greater amounts of material. Movement to scale was not easy and disruptions thwarted Murai's goal. But at least 50 liters of sarin were produced and Aum's resources and skills were adequate to produce more.[194] In contrast, Endo thought he had small samples of *C. botulinum* and *B. anthracis*, but he struggled and failed when he sought to ferment large quantities of potent material. The engineering skills associated with a chemical plant were more prevalent and more readily implemented than those associated with biological fermentation. The results comported with the odds. Potent chemical weapons were produced in quantities that would have permitted mass killing – potent biological weapons were not.

This second factor was mitigated for Aum by the considerable cost (perhaps as high as 30 million dollars) and visibility associated with its chemical production plant. Now that the world is more sensitized to the risks of terrorist groups achieving weapons of mass destruction (WMD) capabilities, it is less likely that a plant of the size of Satyan 7 could be constructed without triggering an investigation. Such an effort might be well disguised or established on a smaller scale, however, by taking advantage of the development over the last decade of powerful, low-cost micro-production chemical capabilities.[195]

A third factor that made chemical weapons easier to develop was that chemicals of the required purity were readily accessible at low visibility for plausibly legitimate business purposes. By contrast, Aum's efforts to harvest *C. botulinum* from the natural environment were unproductive – finding natural samples of the requisite and demonstrable potency is difficult.[196] The cult's hospital work provided a rationale for purchasing biological materials, and other groups or individuals with terrorist intentions may use similar facades. But even in the 1990s, it was much more difficult for Aum to acquire virulent strains than it was to acquire chemical reagents and it apparently wanted to avoid the visibility that ordering these anthrax strains might have conferred. At present regulatory and policing constraints are strong. Although synthetic biology and other developments enhance opportunities for biotoxin synthesis, creating or procuring seed stock seems likely to be more difficult than procuring chemicals. (Obtaining nuclear materials and equipment would be harder still.)

> *To this day neither we nor the leaders of Aum Shinrikyo know whether [Seiichi] Endo possessed a fully virulent strain of* B. anthracis *and was unable to conserve it, or whether he conserved it but could not amplify it, or whether he never achieved it at all.*

Fourth, the potency and purity of chemical material can be assayed within an hour, and its killing effect thereby readily calculated. Biological material is more difficult to assess. Although by and large Aum understood its chemical weaponry, it

never confidently or accurately knew what it had, or lacked, in the potency of its biological weapons. Reliably assessing of biological material will typically require extensive testing, often with animals. Moreover, pathogens – which are living organisms – are likely to evolve and/or degrade over time and under different conditions. In addition to posing challenges in storage, this amplifies difficulties in assessment. To this day neither we nor the leaders of Aum Shinrikyo know whether Endo possessed a fully virulent strain of *B. anthracis* and was unable to conserve it, or whether he conserved it but could not amplify it, or whether he never achieved it at all.

2. Effective dissemination can be challenging. Precise targeting always eluded Aum.

The cult was handicapped because its ideology and paranoia (and perhaps parsimony) pushed it toward self-production of pumps and sprayers. Aum's dissemination equipment often clogged, overheated and caught fire or failed to adequately disperse chemical and biological materials. In Nakagawa's memorable phrase, the pump first used for anthrax "spouted like a whale." Even if it had bought better equipment, the cult would have had other problems. Its aerosols did not disperse well – they blew back on the perpetrators; and even when the aerosols were disseminated, poorly predicted shifting winds caused them to miss their targets. Although a solvable problem, delivery is clearly a separable and substantial challenge involving a range of issues that especially bedevil efforts to target particular individuals or places.

3. Accidents recurred in Aum's chemical and biological programs but did not deter pursuit of these weapons.

Aum had little commitment to, and only modest ability for, self-protection. It vaccinated members directly involved in anthrax production,[197] but no vaccine was available against botulinum toxin. Respiratory equipment and a liquid penicillin drink provided some protection against low-level anthrax and botulinum exposures. Similarly, respiratory equipment and injectable antidotes offered some protection against chemical accidents. These protections, however, were haphazard and we have noted a number of dangerous exposures during sarin development, production and dissemination. However, this experience did not alter Aum's program, and we anticipate that it is not likely to significantly affect others. Nor did any differential risk appear to tilt the organization toward chemical rather than biological weapons or vice versa.[198]

4. When Asahara and his chief lieutenants made the transition to violence, they readily brought other leaders down this path. The few dissidents were effectively persuaded, isolated or killed. As violence became the norm, there is no evidence of resistance to moving from conventional weapons to pathogens and chemicals. These were originally attractive as means of assassination, but, both accidentally and then intentionally, they came to be used as instruments of indiscriminate mass attacks.

Aum began as a Buddhist organization and Asahara's 1986 sermons affirmed the creed of nonviolence. Unlike many terrorist groups, it did not advertise a violent intent and did not recruit leaders and members committed to violence. Within two years of its founding, however, Aum was using torture and murder as a means of suppressing internal and external dissent. The cult justified the firing of Asahara's wife as a means of purification. A few months later, key members collaborated in the criminal act of covering up an accidental drowning.

It is notable that there was little resistance among the perpetrators of these acts. Some members (e.g., many of the women around Asahara) were kept apart from activities relating to violence.[199] For the others, violence that might otherwise have seemed outrageous was readily justified in a religious context, and cult members paid great deference

to Asahara as a messianic figure.[200] After violence was committed, a few, such as Nakagawa, were initially distressed. In most of these cases, however, isolation, propaganda, sleep deprivation and group pressure squelched resistance. Those who did not conform were killed.

Aum was initially attracted to chemicals and pathogens as a means of assassination.[201] It readily made a transition from discriminate violence aimed at selected individuals to indiscriminate violence with large numbers of victims. After Aum crossed the threshold of violence, we observed no instance in which there was special reluctance among Aum's leaders to use pathogens and chemicals or to kill many people randomly, rather than a few specifically.

Violence did not splinter the leadership group; it bound it more tightly. Aum's acts of violence gave the participants a secret and shared sense of stepping outside society's restrictions, mutual vulnerability (lest one defect and report the others) and a shared experience of danger and accomplishment from not being caught and held to account.

Those not in the leadership group were less evidently committed, but almost all were kept in some degree of ignorance, did not associate Aum with particular acts of violence and/or accepted a ready rationale for the programs: they were defensive, to prepare Aum in case it was attacked, particularly if it was attacked by weapons of the kind Aum was developing.

5. Law enforcement pressure can be highly disruptive, even if it is not an effective deterrent.

From a 21st-century standpoint, it is astonishing that Aum received so little scrutiny from the police. Its success in perpetrating violence and developing extensive weapons programs without incurring much visibility is no doubt related to idiosyncrasies of Japan in the 1990s.[202] Terrorism was not so much a matter of concern, religious organizations were given wide latitude and police agencies were fragmented and ineffectual.[203]

The Japanese police were remarkably passive in responding to a number of clues pointing to Aum's violent acts.[204] Even when an Aum badge was found beside the corpse of its most eminent critic, and when sarin was dispersed near the residences of judges critical of the cult, the police directed little investigative attention at the group. Perhaps as a result of this, or perhaps because of recklessness or religious certitude, we found no instance in which perceptions of risk or likely penalty affected Aum's inclinations to pursue biological or chemical weapons.

Nonetheless, while Aum's strategic decisions about WMD were not shaped by fear of the police, its tactical decisions were very much affected. When odors prompted complaints and police inquiries, biological dissemination was abruptly halted and equipment disassembled. When hostile litigation and press articles made Aum feel that the police would search its premises, the cult crudely disguised and then disassembled its chemical production capabilities. A few months later, an impending police raid provoked a premature attack much less devastating than would have been the case had full preparations been made. Aum's experience suggests that police pressure can significantly disrupt, even if it is not likely to deter, the pursuit of WMD by a committed group.

6. The key work on Aum's biological and chemical programs and its attacks were largely conducted by the leadership group. This made it easier to keep the program secret, but concentrating of activities among the leaders imposed considerable burdens and risks and generated sometimes-debilitating distortions. Groups that follow this path are likely to have similar problems.

The need to hide from police, intelligence agencies and military organizations makes secrecy a predicate for all terrorist operations. It is especially important to a terrorist group seeking to develop

WMD programs because these programs take longer than conventional operations to evolve. As a rule of thumb, we think that conventional bomb-makers who manufacture their weapons need days, chemists need weeks, biologists need months and nuclear terrorists need years.[205]

It is not surprising, therefore, that Aum was obsessed with secrecy. Fear of discovery encouraged the group repeatedly to favor self-construction over open procurement.[206] The resulting workarounds contributed to notable failures including biological materials that were not pathogenic, delays and difficulties in chemical production, and accidents and failures in dissemination.

The pattern of using leaders to conduct key operations exposed the organization to considerable risk.[207] Less obviously, but probably even more significantly, the organization limited its opportunities by predominantly confining the development of its biological and chemical programs to the leadership group. Leaders did the research and supervised production. If a government or an ordinary commercial operation wants to initiate a program requiring biological or chemical expertise, it can openly search, indeed often advertise, for a desired specialty. A terrorist group cannot operate this way. It can covertly search and target some arenas for recruitment (e.g., a particular university faculty or segment of a military organization),[208] but Aum's experience suggests that the strongest tendency is to inventory trusted members and to select whoever is best suited to meet the need of the moment.

In the language of economics, the success of new programs is defined less by the demand for these programs (the desire to have them and the willingness to invest in them) than by the supply of factors to meet this demand. Aum had plenty of money, little difficulty accessing relevant information and few problems accessing the materials its leaders desired. When the organization undertook programs, however, it turned only to trusted members with limited tacit knowledge and presumed they could bring relevant talents to the task. The inadequacy of this "tribal" talent for some tasks caused diversion, waste, delay and a greater likelihood of failure.

Thus, for example, though Aum's biological program conformed to the dominant understanding of the time by seeking to use bacteria as weapons, Endo was a virologist, not a microbiologist trained to work with bacteria. His skills with bacteria appear to have been more conceptual than hands-on. In this light, it is not surprising that the program repeatedly failed.

Moreover, secrecy inhibited clear-eyed assessment of this failure. Failure is often ambiguous; it can be attributed to any of a number of causes. Endo asserted that the deficiency was in the dissemination. Others thought it was in the bacteria. No second opinion could be readily obtained. The skills on hand did not permit a dispassionate expert assessment of the nature of the failure and a means to correct it.

The difficulties that arose from Aum's need for secrecy are likely to recur in other terrorist organizations. Reluctance to transcend the trusted inner circle of members is likely to leave terrorist performance significantly short of what might otherwise be achieved. This may not be the case, however, when terrorist groups are supported by governments. Governments, of course, are still constrained by secrecy, but they have much larger workforces and more opportunities to engage outside experts. A government-terrorist link is therefore of special concern and, in our view, considerably heightens the risks of successful WMD programs. Terrorist groups that have many members with biological experience (perhaps because they have a biomedical focus, as for example might occur in an ecoterrorist group) may also pose serious concerns.

7. Aum's hierarchical structure facilitated initiating and resourcing biological and chemical programs. It distorted their development and assessment, however. We anticipate similar effects in other terrorist organizations.

The hierarchical character of Aum made it easier to initiate WMD programs, create a division of labor to advance these programs and channel funds as needed to sustain these efforts. Over the half decade of concern to us, Aum became increasingly a military organization. By 1994, it had become structured according to the model of a government.[209] Furthermore, cult members regarded Asahara as the messiah. As a result, his orders were treated as decrees, even when seen as inexplicable. His subordinates had a strict ranking, and penalties, including torture, were inflicted for disobeying a superior.

Our informants had some incentive to invoke a "Nuremberg defense," each describing himself as simply following orders. Our interviews, however, occurred long after the informants' judicial convictions; they were frequently candid about their responsibilities for condemnable acts; and their comments about commands fit with other more disinterested accounts. We think that in much of their work on biological and chemical programs, key actors did what they were told simply because they were told to do it.

At the same time, however, the established hierarchies intensified the distortions associated with secrecy. When Asahara recklessly demanded rapidly preparing an attack or his key lieutenants set excessive production targets, they engendered accidents and failures. Because Endo had a lofty rank, his program continued despite its failings. Moreover, whereas in other organizations rank frequently (though certainly not invariably) relates to capability in the relevant subject area, the smaller size of a terrorist organization makes specialization more difficult. Other variables besides technical skill determine power. Endo's status derived in large measure from his religious and fundraising achievements and only secondarily from his expertise as a biologist. Conversely, Tsuchiya had little control because he was quite junior and was viewed simply as offering technical skills. Considerations of rank greatly affected programmatic control and therefore programmatic success.

8. Even a retrospective assessment of Aum is difficult and has gaps and uncertainties. Contemporaneous assessments of Aum's intentions and capabilities would have been much more difficult and, even if correct, partial interim understandings could have been misleading. Similar uncertainty is likely to be common when assessing other terrorist groups. Our expectations from intelligence, and the weight we attach to it, should be moderated accordingly.

This report illuminates the tremendous difficulty in assessing a terrorist group. We had the advantage of working retrospectively and with assistance from some well-placed and apparently highly cooperative informants. Yet, gaps and uncertainties persist. Of course, intelligence agencies can sometimes obtain electronic information, infiltrate agents, obtain material samples or take other steps not open to us. Problems of assessment, however, are not simply problems of developing sources – they are intrinsic to the nature of this and analogous groups. As described here, Aum generated an eccentric mélange of programs that were religious and political, sensible and bizarre, meditative and militaristic, sophisticated and naïve. We are struck by the mercurial nature of the decision-making and the diversity and unpredictability of the paths taken. At most times and places, from most angles of vision, there would have been little basis for soundly predicting Aum's evolution and its successes and failings.

Seen in this light, information obtained from a single perspective could be highly misleading. An outside appraiser or inside informant who knew

Terrorists need time; time will be used for trial and error (tacit knowledge acquisition); trial and error entail risk…but Aum found paths to WMD, and other terrorists are likely to do the same.

only the nuclear program would evaluate Aum as malevolent, but bizarre and essentially harmless, as evidenced by its plan to mine uranium. A similarly positioned observer who knew only the chemical program would describe the group as technically skilled, organized for industrial-level production and potent. An observer with knowledge of just the biological program would fall somewhere in the middle – the group had capabilities and ambitions, but was historically ineffectual and likely to remain so. And, as a further inducement to error, particular programs looked very different at different times. Biological efforts, for example, were organizationally embraced and focused on botulinum in 1990, abandoned in 1991 and 1992 and returned to with a focus on anthrax from 1993 onward.

Accordingly, policymakers should moderate their expectations from intelligence and recognize that assessments of terrorist groups, even if they appear to be authoritative, are likely to be incomplete, uncertain and transitory. From the limits of our analysis, readers may infer the magnitude of the challenge confronting intelligence agencies.

9. Aum's persistence was impressive and produced successes despite its commitment to many bizarre ideas, its misallocation of resources and its numerous operational failures.

All of the cult's biological attacks and most of its chemical attacks failed. These pages describe unachievable goals, mismatched skills, design misconceptions, excessively rushed programs, disrupted programs, distractions because of unrelated demands, accidents, personality clashes, conflicts between factions and a host of other difficulties. Aum suspended its WMD work more than once. Yet, it kept returning to this program and persistently pursued tactical adjustments that it thought would bring success. Thus, for example, it moved from botulinum to anthrax, from liquid biological agents to dried agents and from biologicals to chemicals. When Aum's truck failed to disperse sarin according to one design, the group developed a more sophisticated design. When its fermenters became contaminated, members redesigned them to be more successful. Insofar as this experience indicates, it is a story of evolution. Terrorists need time; time will be used for trial and error (tacit knowledge acquisition); trial and error entail risk and, in this case, provoked disruption; but Aum found paths to WMD, and other terrorists are likely to do the same.

10. We are playing Russian roulette.

Groups such as Aum expose us to risks uncomfortably analogous to playing Russian roulette. Many chambers in the gun prove to be harmless, but some chambers are loaded. The blank chambers belie the destructive power that the gun can produce when held to the head of a society. Our analysis suggests that the cult's 1995 Tokyo subway attack would have been much more lethal if Aum had not destroyed its purer sarin when it feared discovery a few months earlier or disseminated the low-purity sarin more effectively.

Accordingly, our report reinforces a view that intelligence and law enforcement agencies are right to focus even on marginal groups that seem eccentrically harmless. Fire may be signaled by harmless smoke.[210] Aum is in our past. We undertook this work because we believe that other terrorists may endeavor to use biological and chemical weapons in our future.

Appendices

APPENDIX A: TABLE OF AUM MEMBER INTERVIEWS 43

APPENDIX B: LIST OF CORRESPONDENCE WITH AUM MEMBERS 44

APPENDIX C: BIOLOGICAL WEAPONS INCIDENTS CHART PROVIDED BY TOMOMASA NAKAGAWA 45

APPENDIX D: AUM CHEMICAL WEAPONS ATTACKS PROVIDED BY TOMOMASA NAKAGAWA 46

APPENDIX E: TESTING SARIN IN AUSTRALIA? 47

APPENDIX F: AUM'S SARIN PRODUCTION PROCESS 49

Aum Shinrikyo

Insights Into How Terrorists Develop Biological and Chemical Weapons

APPENDIX A: TABLE OF AUM MEMBER INTERVIEWS

DATE	INTERVIEWEE	INTERVIEWER(S)
April 21, 2008	Fumihiro Joyu	Richard Danzig, Rui Kotani
April 22, 2008	Tomomasa Nakagawa	Richard Danzig, Rui Kotani
April 22, 2008	Kiyohide Hayakawa	Richard Danzig, Rui Kotani
March 29, 2010	Tomomasa Nakagawa	Lloyd Hough, Rui Kotani, Marc Sageman, Hidemi Yuki
March 29, 2010	Masami Tsuchiya	Lloyd Hough, Rui Kotani, Marc Sageman, Hidemi Yuki
March 30, 2010	Fumihiro Joyu	Richard Danzig, Lloyd Hough, Marc Sageman, Hidemi Yuki
March 30, 2010	Naruhito Noda	Lloyd Hough, Terrance Leighton, Marc Sageman, Hidemi Yuki
March 31, 2010	Masami Tsuchiya	Lloyd Hough, Terrance Leighton, Marc Sageman, Hidemi Yuki
March 31, 2010	Tomomasa Nakagawa	Lloyd Hough, Terrance Leighton, Marc Sageman, Hidemi Yuki
April 2, 2010	Tomomasa Nakagawa	Lloyd Hough, Terrance Leighton, Marc Sageman, Hidemi Yuki
April 2, 2010	Masami Tsuchiya	Lloyd Hough, Terrance Leighton, Marc Sageman, Hidemi Yuki
September 10, 2010	Tomomasa Nakagawa	Hidemi Yuki
September 10, 2010	Masami Tsuchiya	Hidemi Yuki
September 15, 2010	Tomomasa Nakagawa	Hidemi Yuki
September 15, 2010	Masami Tsuchiya	Hidemi Yuki
September 17, 2010	Masami Tsuchiya	Hidemi Yuki
October 12, 2010	Masami Tsuchiya	Richard Danzig
October 12, 2010	Tomomasa Nakagawa	Richard Danzig
October 15, 2010	Tomomasa Nakagawa	Richard Danzig
October 15, 2010	Masami Tsuchiya	Richard Danzig

APPENDIX B: LIST OF CORRESPONDENCE WITH AUM MEMBERS

DATE	SENDER	RECIPIENT	TOPIC
April 22, 2008	Tomomasa Nakagawa	Richard Danzig	History of biological weapons chart
March 12, 2010	Masami Tsuchiya	Richard Danzig	Pre-interview documents
March 25, 2010	Masami Tsuchiya	Richard Danzig	Pre-interview documents
April 9, 2010	Tomomasa Nakagawa	Richard Danzig	Information on Kameido anthrax case
May 25, 2010	Tomomasa Nakagawa	Richard Danzig	Additional details on BW/CW programs
June 15, 2010	Tomomasa Nakagawa	Richard Danzig	Additional details on BW/CW programs
July 14, 2010	Masami Tsuchiya	Richard Danzig	Letter referencing earlier correspondence
August 4, 2010	Tomomasa Nakagawa	Richard Danzig	Additional details on BW/CW programs
September 28, 2010	Tomomasa Nakagawa	Richard Danzig	History of biological weapons chart (updated)
September 29, 2010	Tomomasa Nakagawa	Hidemi Yuki	Answers to questions posed by research team
October 1, 2010	Tomomasa Nakagawa	Hidemi Yuki	Answers to questions posed by research team
October 4, 2010	Tomomasa Nakagawa	Hidemi Yuki	Answers to questions posed by research team
October 6, 2010	Tomomasa Nakagawa	Hidemi Yuki	Answers to questions posed by research team
October 13, 2010	Tomomasa Nakagawa	Richard Danzig	Details of Satyan 7 facility
October 15, 2010	Masami Tsuchiya	Hidemi Yuki	Answers to questions posed by research team
October 19, 2010	Masami Tsuchiya	Richard Danzig	Additional information from Oct. interviews
November 1, 2010	Tomomasa Nakagawa	Richard Danzig	Details of the second sarin truck
November 9, 2010	Tomomasa Nakagawa	Richard Danzig	Corrections to earlier letters
November 25, 2010	Tomomasa Nakagawa	Richard Danzig	Details of the first sarin truck
January 13, 2011	Kenichi Hirose	obtained by authors	Background on Aum
February 22, 2011	Tomomasa Nakagawa	Richard Danzig	Edits to draft version of report
March 30, 2011	Tomomasa Nakagawa	Richard Danzig	Edits to draft version of report
June 10, 2011	Kenichi Hirose	obtained by authors	Details of Aum's botulinum program
June 30, 2011	Kenichi Hirose	obtained by authors	Details of Aum's botulinum program

APPENDIX C: BIOLOGICAL WEAPONS INCIDENTS CHART PROVIDED BY TOMOMASA NAKAGAWA

Earlier studies have compiled charts identifying Aum's biological weapons incidents.[211] Although it excludes Aum's chemical weapons attacks, Nakagawa's chart includes unique material and we consider Nakagawa's references to the biological weapons attacks to be the most authoritative. Nakagawa provided a timeline of chemical weapons attacks in subsequent correspondence. That information is reproduced in Appendix D.

History of "B weapon" of AUM

by T. Nakagawa April 22, 2008
(revised Sep 28, 2010)

- (1) ~ (3): Production in plant. Nakagawa was an assistant of Endo,Murai, and Joyu(except(1))
- (4) ~ (6):Production in laboratory by Endo alone. Nakagawa took part in delivery except (5). (5) is hearsay.
- Bacteriologist was Endo alone in (1)-(6).
- Mt.Fuji Center was in Shizuoka. Kamiku(K)1(where Satian(S)2 was build later) and K2(where S6 was build later) were in Yamanashi.

'88 Nov.: Endo became a staff(shukkesha) of AUM with AIDS virus.(hearsay from Endo)

'89 Mar.: Endo bought a small amount of culture medium (about 20 types) from Isekyu.(The list was confiscated by Kanagawa Prefecture Police.)

'89 Aug.31: Nakagawa became a staff(shukkesha) of AUM.

※After the case, the facility marked with was dismantled and was abandoned without dismantlement.

		cultivation	delivery	target	reason of failure
'90	(1) Mar.-Jul.	Labos at Mt.Fuji Center and K1. Plant at K1. C.botulinum plant: 1batch=10ton =cubed box as a fermenter (2m×2m×2.5m) About 50 batches were produced. ※1ton=1000kg=2204.6lb	From trucks (delivered 20 ~ 40 times?) / From baloons (not carried out)	• The center of Tokyo (hearsay) • Rivers(hearsay) / • All over the world	• Endo could not get pathogenic strain. • Lack of knowledge (bacteriology, plant engineering, and delivery)
'91		B.subtilis was always prominent. (microscopic examination)	B.anthracis was prominent in most of the cultures(microscopic examination) and Endo made more examination?		
'92		Labos at Mt.Fuji Center and Kameido. Plant at Kameido. B.anthracis plant: 1batch=10ton =50drums (200ℓ) as fermenters. 2batches were produced.	From Kameido AUM Center, Tokyo. Spraying like "whale spouting" two times. To spray one batch, at least 2 or 3 days were needed. 1st spray:about Jun.9-. 2nd spray:end of Jun.-.	The inhabitants around the Kameido Center?	• The same reason as '90 • All the inhabitants could see AUM sprayed "something" with bad smell. They protested against AUM without desease.
'93	(2) May-Jul. (3) Jul.-Aug. (4)Nov.	Labos at Mt.Fuji Center and K2. Plant at K2. B.anthracis plant: Same 50drum-fermenters as Kameido, several batches were produced. C.botulinum plant: an used fermenter, 1 ~ 2 batches(?)	B.anthracis from trucks (delivered 10 ~ 20 times?) C.botulinum was not delivered. (supposition)	The center of Tokyo (supposition)	The same reason as '90
'94	(5)Nov.4	Labo:K2 C.botulinum or botulinus toxin	From a sprayer of agricultural chemicals on a car. One time,20ℓ.	Daisaku Ikeda (Soka Gakkai)	Endo failed production.
'95	(6)Mar.15	Labo: Jivaka(CMI)LaboHouse near S7. Botulinus toxin	Mixed with a glass of juce	Taro Takimoto (lawyer)	
		Labo: Jivaka(CMI)LaboHouse near S7. Recinbinat botulinus toxin	An ultrasonic humidifier in a suitcase. 3 suitcases were used.	Kasumigaseki Station	

APPENDIX D: AUM CHEMICAL WEAPONS ATTACKS PROVIDED BY TOMOMASA NAKAGAWA

DATE	ATTACK
November 18, 1993	Sarin attack against Daisaku Ikeda (botulinum at the same time)
~December 20, 1993	Sarin attack against Daisaku Ikeda
May 9, 1994	Sarin attack against Taro Takimoto
June 27, 1994	Matsumoto sarin attack
Mid-September 1994	VX attack against Toro Takimoto
September 20, 1994	Phosgene attack against Shoko Egawa
December 2, 1994	VX attack against Noboru Mizuno
December 12, 1994	VX attack against Tadahito Hamaguchi
January 4, 1995	VX attack against Hiroyuki Nagaoka
Late January 1995	VX attack against Ryuho Ohkawa
March 20, 1995	Sarin attack on Tokyo subway system
April 30-May/June 1995	Hydrogen cyanide attack at underground shopping center

Information reproduced from letter from Tomomasa Nakagawa to Richard Danzig on March 30, 2011. We have no additional information about any chemical attacks in June 1995.

APPENDIX E: TESTING SARIN IN AUSTRALIA?

After Aum's 1995 Tokyo sarin attacks, the Australian Federal Police (AFP) "assessed that [in 1993] the Sect used Banjawarn Station [on a 500,000 acre farm in a remote area of Western Australia] to conduct nerve-agent experiments on sheep and intended to establish a permanent facility in Australia."[212] In our interviews, Tomomasa Nakagawa dismissed this as a baseless "internet rumor,"[213] and Masami Tsuchiya said he had never heard this while at Aum. We do not have access to the primary evidence that underlays the AFP conclusion and cannot resolve the issue of its accuracy. We think, however, that the matter is worth a brief discussion both because it relates propositions about Aum's efforts to field-test its chemical weapons and because the issue illuminates some of the difficulties in assessing physical evidence about such programs.

According to the AFP reports, Shoko Asahara and 24 other Aum members traveled from Tokyo to Perth on September 9, 1993. The group carried tools, generators, ditch diggers and personal protective equipment (including gas masks and respirators). In their baggage, customs officers found numerous chemicals including perchloric and hydrochloric acids, the latter of which was contained in large glass bottles marked "hand soap." The Australian police confiscated two crates of chemicals and laboratory equipment and charged Seiichi Endo and Nakagawa with carrying dangerous goods on an aircraft. They were each fined 2,400 Australian dollars. Aum then obtained more chemicals to replace those seized by customs officials and the group flew in chartered aircraft from Perth to Banjawarn Station.[214] The group stayed in Australia for eight days. They attempted to return to Australia in October 1993 but were denied visas. Banjawarn Station was sold a year later.

The primary aim of this trip appears to have been to search for uranium and test samples from the site.[215] It is possible that at this point Aum may not have known if the sarin product was effective and it may have used the farm as an opportunity to test the sarin on animals. The AFP embraced this conclusion because it found 29 dead sheep, a document written in Japanese titled Banjawarn Station that contained notations for classifying dead or injured sheep, and some methylphosphonic acid (MPA) in the soil near the sheep. Methylphosphonic acid is a sarin degradation product found by a similar Japanese police investigation outside Satyan 7.[216]

However, dead animals are not uncommon in this environment, an indeterminate number of these animals died from head wounds, and, in the view of some (though not all) of the experts consulted by the AFP, isopropyl methylphosphonic acid (IMPA) would need to have been detected to make a "conclusive" case that sarin was present.[217] We asked an independent chemist, Peter Haaland, who has substantial experience in U.S. government agencies, to review the available materials. We received the following comments:

> While it is clear that an analyte that is consistent with a composition of MPA was observed in the wool and soil near the carcasses, the evidence that this came from sarin is not compelling…
>
> [T]he crucial control experiment where rotten sheep flesh is subjected to extraction, derivitization, and analysis by GC/MS [Gas Chromatography/Mass Spectroscopy] was not reported. If MPA or a compound that is indistinguishable from MPA by this assay were produced in trace amounts during putrefaction it would be found in the wool and soil around dead sheep but nowhere else. I don't see how this can be ruled out from the data that have been presented…
>
> …"MPA" was detected in wool samples from every site where the soil also tested positive, but

> this is consistent with uptake of natural decomposition products. It seems to me that the (bio) chemical conditions that bleach bones would be adequate to produce traces of MPA or confounding analytes.[218]

In many respects, this response illustrates the differences about forensic evidence (also sometimes labeled Measurement and Signature Intelligence or MASINT) that occur in a variety of intelligence contexts. Observable indicia are often sparse, can be attributed to other causes and can form the basis of different conclusions. In all instances the forensic evidence must be interpreted against the backdrop of other information, including, in this case, the comments of Nakagawa and Tsuchiya, two otherwise apparently candid informants. As incidental evidence, we note that experimenting on sheep would have been contrary to Aum's policy of avoiding animal testing and there is no evidence of any reference within Aum to any such testing. On the other hand, it may be argued that a policy against animal testing would make it more likely that anyone within Aum who wanted tests would conduct them in a remote location like Australia and not make the results known to other members.

APPENDIX F: AUM'S SARIN PRODUCTION PROCESS

Sarin is a "first generation" nerve agent that was identified in 1938 by German researchers who were reexamining toxic organophosphate insecticides following the discovery of the nerve agent tabun.[219] Once its neurotoxic properties were understood, it became a candidate for weaponization, and was given the name sarin, which is derived from the names of the IG Farben researchers who synthesized it (Schrader, Ambros, Rüdriger and van der Linde). As World War II drew to a close, the Allied Powers (the United States, the United Kingdom, France and the Soviet Union)[220] became aware of German nerve agent research, production and weaponization.[221] The German sarin production method was termed the DMHP (dimethyl hydrogen phosphite) process and was used by the Allies after World War II until it was superseded by a succession of more advanced methods. The five-step DHMP process was well known in the open literature and Aum selected this method for sarin synthesis.

Masami Tsuchiya's successful small-scale sarin synthesis encouraged Aum to build a large-scale production plant (Satyan 7) which was designed to produce 70 tons of nerve agent.[222] Satyan was estimated to cost more than 10 million dollars to construct and equip. It contained a two-story distillation column, numerous stainless holding tanks for precursors and intermediates, five chemical reactors, heat exchangers, pumps and a computer process control system.

Several sources have speculated that the plans for the Satyan 7 sarin plant may have come from Russia. Masaaki Sugishima reports that a senior Aum member testified in court in 1997 that Aum obtained the design for the sarin plant from a Russian source, and donated 10 million yen to Oleg Lobov, the secretary of the Russian Security Council.[223] As testimony to the U.S. Senate Permanent Subcommittee on Investigations indicated:

> [A] Russian known to be a secretary of Lobov's sent facsimiles to Hayakawa in Japan, and Hayakawa reportedly visited Lobov during his visits to Russia throughout the 1992–95 time period. Lobov reportedly met with Aum officials on his own without informing the Russian embassy or asking its advice. Sources say that this February 1992 meeting was agreed to without the participation of the Russian Foreign Ministry or intelligence services prior to Lobov's trip to Japan…In February 1992, Lobov was invited to Japan by Nissho-Iwai Company, Ltd., and met with Asahara. In March 1992, after chartering an Aeroflot aircraft, a delegation of 300 cult members headed by [Shoko] Asahara visited Russia and met with Aleksandr Rutskoy, Ruslan Khasbulatov, and Lobov. Again, these last few items are items which have been confirmed through official Japanese documents.[224]

Approximately 100 Aum members were involved with constructing and operating Satyan 7. Asahara ordered that the plant produce two tons of sarin per day.[225] The hurried construction had resulted in faulty welds, which caused highly corrosive and toxic intermediates to leak from the piping onto floors. A serious, large-scale accident occurred on July 9, 1994, when reaction vessels overflowed and released hazardous liquids within and outside of Satyan 7. Fumihiro Joyu attempted to recruit Russian chemical engineers with sarin production experience to correct the problems with Satyan 7 but was unsuccessful.[226] Given the dangerous and poorly controlled production process, the plant ceased operations in December 1994.

The Tokyo Metropolitan Police Department investigation of Satyan 7 site documents following the Tokyo subway attack revealed that the

FIGURE 1: CHEMICAL VERIFICATION OF SARIN MANUFACTURE IN AUM SHINRIKYO'S CHEMICAL PLANT

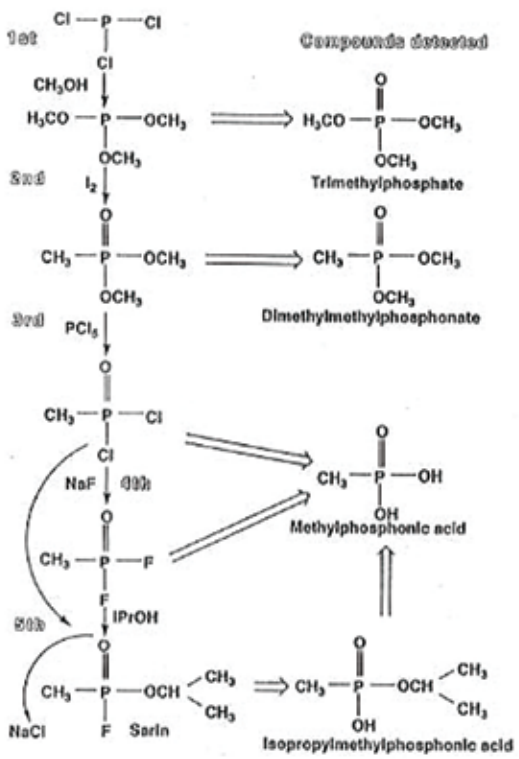

Source: Anthony T. Tu, "Toxicological and Chemical Aspects of Sarin Terrorism in Japan in 1994 and 1995," *Toxin Reviews* (formerly *Journal of Toxicology: Toxin Reviews*) 26, 3 (July 2007): 254.

large-scale sarin synthetic process involved five steps (see Figure 1).[227] In the first step, phosphorus trichloride was reacted with methanol to produce trimethylphosphite. In the second step, trimethylphosphite was converted to dimethyl methylphosphonate (DMMP) through a rearrangement created by heating. In the third step, DMMP was reacted with phosphorus pentachloride by heating, to produce methylphosphonyl dichloride. In the fourth step, methylphosphonyl dichloride was reacted with sodium fluoride to produce methylphosphonyl difluoride. In the final step, methylphosphonyl difluoride and methylphosphonyl dichloride were mixed with isopropyl alcohol to produce sarin.

FIGURE 2: A DIAGRAM OF AUM SHINRIKYO'S SATYAN 7 SARIN PRODUCTION FACILITY

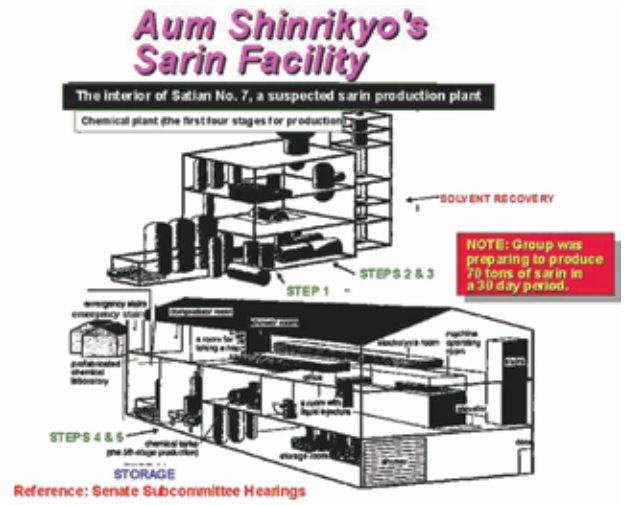

Source: United States Senate, Permanent Subcommittee on Investigations, *Hearings on Global Proliferation of Weapons of Mass Destruction: A Case Study of the Aum Shinrikyo,* October 31, 1995 (Washington: U.S. Government Printing Office, 1996).

From wipe samples taken at Satyan 7 from the first-step equipment, trimethylphosphate, n-hexane and N,N-diethylaniline (DEA) were detected. From the second-step equipment, trimethylphosphate, DMMP, iodine and DEA were detected. From the third-step equipment, methylphosphonic acid (MPA), DEA, phosphorus oxychloride and sodium chloride were detected. From the fourth-step equipment, MPA, DEA, sodium chloride and sodium fluoride were detected. From the final-step equipment, isopropyl methylphosphonic acid, MPA, DEA, DMMP and sodium chloride were detected. Chemical analysis of evidentiary samples taken from the manufacturing plant (see Figure 2) identified only environmentally stable compounds corresponding to the synthetic routes, but these signatures were sufficient to verify the synthetic scheme for sarin at the Aum facility.

ENDNOTES

1. "Tokyo Marks Subway Sarin Attack," *The Japan Times* (21 March 2010), www.japantimes.co.jp/cgi-bin/nn20100321a1.html.

2. The precise number of biological and chemical (which Aum termed BC) attacks is subject to debate, both about definitions of an attack and about conflicting evidence regarding individual events. We believe that the best source for enumerating biological attacks is a chart prepared by the cult's doctor, Tomomasa Nakagawa, for Richard Danzig on April 22, 2008, and revised on September 28, 2010. The revised chart is included in this report as Appendix C. Reflecting further on this chart more than two years later, Nakagawa wrote, "I believe these lists include all the BC we[a]pon attacks which were actually carried out by Aum Shinrikyo. Though there might be a literature which insists other [*sic*] BC weapon attacks, the existance [*sic*] of the attacks are very doubtful." Letter from Nakagawa to Richard Danzig (30 March 2011). In the same letter, Nakagawa discussed how to count the number of attacks:

> It is not easy to count the number of attacks, because it depends on the rule for counting and the definition of "attack." For example, in 1990 we sprayed supposed botulinus toxin 20-40 times. We might say "20-40 botulinus attacks," "one series of botulinus attacks," or "no attack because it was not botulinus toxin." [As explained in the text, the cult's toxin was ineffective.] Giving another example, lawyer [Taro] Takimoto claims that he was attacked with VX twice in 1994. At the first attack, we put VX on a door of his car. But VX was incomplete. At the second, VX was apparently incomplete because it was not liquid but half-set jelly. And we gave up the attack. We therefore might say "two VX attacks," "one VX attack," or "no attack because it was not VX." So we must define "one attack." When Aum actually used BC weapon[s], incomplete or complete, I call it attack. And when Aum made a series of attacks continuously against the same target using the same weapon made at the same labo[ratory]/plant, I count this as one attack."

We derive our estimate of chemical attacks from Nakagawa's calculation, presented in the same letter and reproduced as Appendix D, and from our interviews, using the definitions employed by Nakagawa above. Other useful compilations of Aum's perceived attacks may be found in Amy Smithson, "Ataxia: The Chemical and Biological Terrorism Threat and the US Response," Henry L. Stimson Center (9 October 2000); Tim Ballard et al., "Chronology of Aum Shinrikyo's CBW Activities," Center for Nonproliferation Studies (15 March 2001), www.cns.miis.edu/reports/pdfs/aum_chrn.pdf; and David E. Kaplan, "Chapter 12: Aum Shinrikyo (1995)," in Jonathan B. Tucker, ed., *Toxic Terror: Assessing Terrorist Use of Chemical and Biological Weapons* (Cambridge, MA: MIT Press, 2000).

3. John Parachini writes, "Aum's research about biological weapons remains remarkably obscure in official, journalistic, and scholarly accounts. . .The story of Aum's interest in, experimentation with, and dissemination of biological agents lacks forensic evidence and is largely based on news reports and court testimony. These activities warrant considerably more thorough examination than they have received thus far. . .Although a great deal more is known about Aum's activities with [chemical] agents, many aspects important to understanding how the organization developed its intellectual capacity and assembled the required equipment and material to use them are not well understood." John Parachini, "Aum Shinrikyo," in Brian Jackson et al., *Aptitude for Destruction, Vol. 2: Case Studies of Organizational Learning in Five Terrorist Groups* (Santa Monica, CA: RAND, 2005): 19, 22. Milton Leitenberg, in a white paper prepared for the "Conference on Emerging Threats Assessment," observes that "no member of any agency of the U.S. government has seen fit to provide a more proper public assessment of the lessons of this [Aum] experience." Milton Leitenberg, "An Assessment of the Biological Weapons Threat to the United States," Institute for Security Technology Studies, Dartmouth College (July 2000), www.fas.org/bwc/papers/dartmthb.htm.

4. Among secondary sources, a first rapid review of the activities of the cult by skilled reporters, David E. Kaplan and Andrew Marshall, necessarily relied heavily on media reports. Robert Lifton was more reflective but developed little new information. Ian Reader benefited from interviews and provides the most reliable public source. Anthony T. Tu was a valuable resource on the chemical attacks. We also benefited from work by Judith Miller and her colleagues. David E. Kaplan and Andrew Marshall, *The Cult at the End of the World* (New York: Crown Publishing, 1996); Robert Lifton, *Destroying the World to Save It* (New York: Owl Books, 2000); Ian Reader, *Religious Violence in Contemporary Japan* (Honolulu: University of Hawaii Press, 2000); Anthony T. Tu, "Toxicological and Chemical Aspects of Sarin Terrorism in Japan in 1994 and 1995," *Toxin Reviews* (formerly *Journal of Toxicology: Toxin Reviews*) 26 (July 2007): 231-274; Judith Miller et al., *Germs* (New York: Simon & Schuster, 2001); and "Chronology of Aum Shinrikyo's CBW Activities," Monterey Institute of International Studies (2001), www.cns.miis.edu/reports/pdfs/aum_chrn.pdf.

5. Marc Sageman and Rui Kotani participated as well in the earlier effort. That effort included interviews with Japanese journalists, government officials and journalists who had studied the cult. Philipp Bleek, at the Center for Strategic and International Studies, provided essential research help and coordination for the first trip. His role was assumed by Zachary M. Hosford for this publication.

6. Seth Carus usefully observes that there are many different definitions of the term "weapons of mass destruction." W. Seth Carus, "Defining 'Weapons of Mass Destruction,'" Center for the Study of Weapons of Mass Destruction, Occasional Paper 4 (2006). In this report, we use the term as advocated by Carus, as originally proposed to the United Nations in 1948, and as employed in subsequent disarmament negotiations. Weapons of mass destruction are devices intended to do harm through "chemical, biological, radiological, or nuclear" means.

7. The authors' interview notes were consolidated in single write-ups, typically paraphrasing and sometimes quoting comments of the interviewee. A complete table of interviews is presented as Appendix A.

8. Usually, but not invariably, one of the Japanese speakers was present. Only three of the authors were permitted to participate in any single prison interview.

9. In addition to specific references, background for this section is drawn from Ian Reader, *Religious Violence in Contemporary Japan* (Honolulu: University of Hawaii Press, 2000); David E. Kaplan and Andrew Marshall, *The Cult at the End of the World* (New York: Crown Publishing, 1996); and Robert Lifton, *Destroying*

the World to Save It (New York: Owl Books, 2000); Japanese press reporting translated by the Open Source Center; and our own interviews.

10. Robert Lifton, *Destroying the World to Save It* (New York: Owl Books, 2000): 17.

11. One supposed remedy consisted of tangerine peel in alcohol that cost thousands of dollars for a three-month course of treatment. David E. Kaplan and Andrew Marshall, *The Cult at the End of the World* (New York: Crown Publishing, 1996): 18.

12. Ian Reader, *Religious Violence in Contemporary Japan* (Honolulu: University of Hawaii Press, 2000): 53; and David E. Kaplan and Andrew Marshall, *The Cult at the End of the World* (New York: Crown Publishing, 1996): 9.

13. Hisako Ishii is no relation to Tomoko Ishii.

14. Ian Reader, *Religious Violence in Contemporary Japan* (Honolulu: University of Hawaii Press, 2000): 99-100.

15. David E. Kaplan and Andrew Marshall, *The Cult at the End of the World* (New York: Crown Publishing, 1996): 11-12; Robert Lifton, *Destroying the World to Save It* (New York: Owl Books, 2000): 20; and Ian Reader, *Religious Violence in Contemporary Japan* (Honolulu: University of Hawaii Press, 2000): 72.

16. Ian Reader, *Religious Violence in Contemporary Japan* (Honolulu: University of Hawaii Press, 2000): 90-91.

17. Ian Reader, *Religious Violence in Contemporary Japan* (Honolulu: University of Hawaii Press, 2000): 148.

18. The figures for the number of members and monks are from Ian Reader, *Religious Violence in Contemporary Japan* (Honolulu: University of Hawaii Press, 2000): 63, 83.

19. Robert Lifton, *Destroying the World to Save It* (New York: Owl Books, 2000): 24.

20. Hideo Murai also invented a sort of electroencephalography helmet for initiates to wear on their heads. This "Perfect Salvation Initiation" device purportedly translated the electromagnetic recording of Shoko Asahara's brain waves into the brain of the wearer.

21. Ian Reader, *Religious Violence in Contemporary Japan* (Honolulu: University of Hawaii Press, 2000): 137-140.

22. This account, which provides a window into high-level Aum decision-making, comes from Kiyohide Hayakawa's testimony at the trial. See Shoko Egawa, "From the Other Witness Stand: Following the Aum Case – Turning Point Leading to Illegal Activities," *Tokyo Shukan Yomiuri* (24 January 1999): 116-117, Open Source Center, FTS 19990625000117.

23. Ian Reader, *Religious Violence in Contemporary Japan* (Honolulu: University of Hawaii Press, 2000): 144.

24. Haruki Murakami reproduces interviews that he (an eminent Japanese novelist) conducted with more midlevel Aum members. Note that Murakami writes that "generally few attempts were made to check whether the statements made in the interviews were factually accurate.… [M]y job was to listen." Haruki Murakami, *Underground: The Tokyo Gas Attack and the Japanese Psyche* (New York: Vintage, 1997, translation 2003): 213-230, quote from 214.

25. Robert Lifton, *Destroying the World to Save It* (New York: Owl Books, 2000): 28.

26. David E. Kaplan and Andrew Marshall note that Hideo Murai graduated with an advanced degree, but it is unclear which degree this might be. David E. Kaplan and Andrew Marshall, *The Cult at the End of the World* (New York: Crown Publishing, 1996): 28. Robert Lifton, *Destroying the World to Save It* (New York: Owl Books, 2000): 28; and David E. Kaplan and Andrew Marshall, *The Cult at the End of the World* (New York: Crown Publishing, 1996): 28-29.

27. Interview with Fumihiro Joyu (30 March 2010). See Appendix A: Table of Aum Member Interviews for a complete list of the authors' interviews.

28. Special Reporting Team, "Arrested Aum Cult Leader Hayakawa Featured," *Shukan Asahi* (Tokyo) (5 May 1995): 22-26, Open Source Center FTS19970508001885.

29. "Aum Shinrikyo Leaders Profiled," *Shukan Bunshun* (Tokyo) (13 April 1995): 34-38, Open Source Center, FTS19950413000009.

30. Letter from Tomomasa Nakagawa to Richard Danzig (22 February 2011).

31. Interview with Tomomasa Nakagawa (31 March 2010). In a letter from Nakagawa to Danzig (4 August 2010), Nakagawa wrote, "[Seiichi] Endo told me about his work owing to the reasons as follows: 1. My religious stage was high enough. 2. I could understand bacteriology and gene engineering to a certain extent while other high stage members [could] not. 3. I had to know his work for the medical protection as a physician. 4. Endo asked me to find articles from online data base (not via Internet but telephone circuit.) And I got them from libraries. 5. I never told the secrets of the B weapon to others. 6. Endo and I had good relations in those days."

32. Interview with Masami Tsuchiya (29 March 2010).

33. Ian Reader, *Religious Violence in Contemporary Japan* (Honolulu: University of Hawaii Press, 2000): 85-87; and Robert Lifton, *Destroying the World to Save It* (New York: Owl Books, 2000): 35. Other ranks gathered from newspaper accounts of the various defendants' testimony at trial.

34. This account is from Toshihiro Ouchi's testimony at the trial. See Shoko Egawa, "From the Other Witness Stand: Following the Aum Case – Installment 58," *Shukan Yomiuri* (Tokyo) (7 March 1999): 164-165, Open Source Center, FTS 19990723000713.

35. Shoko Egawa, "From the Other Witness Stand: Following the Aum Case – Installment 58," *Shukan Yomiuri* (Tokyo) (7 March 1999): 164-165, Open Source Center, FTS 19990723000713.

36. Shoko Egawa, "From the Other Witness Stand: Following the Aum Case – Installment 58," *Shukan Yomiuri* (Tokyo) (7 March 1999): 164-165, Open Source Center, FTS 19990723000713.

37. Ian Reader, *Religious Violence in Contemporary Japan* (Honolulu: University of Hawaii Press, 2000): 145, 193-195.

38. Ian Reader, *Religious Violence in Contemporary Japan* (Honolulu: University of Hawaii Press, 2000): 146-147. Bribes were also rumored to have been given.

39. Interview with Fumihiro Joyu (30 March 2010).

40. The Diet is the bicameral Japanese parliament.

41. Interview with Fumihiro Joyu (30 March 2010).

42. Ian Reader, *Religious Violence in Contemporary Japan* (Honolulu: University of Hawaii Press, 2000): 148.

43. Ian Reader, *Religious Violence in Contemporary Japan* (Honolulu: University of Hawaii Press, 2000): 147-149; and David E. Kaplan and Andrew Marshall, *The Cult at the End of the World* (New York: Crown Publishing, 1996): 37-40.

44. Tsutsumi Sakamoto had taped a program for the Tokyo Broadcasting System (TBS), and, without his knowledge, TBS, afraid of a lawsuit, showed it to Aum senior figures. When the Aum leadership objected, TBS decided not to broadcast the tape. Ian Reader, *Religious Violence in Contemporary Japan* (Honolulu: University of Hawaii Press, 2000): 148-149.

45. Shoko Egawa, "From Another Witness Stand: Following the Aum Case – A Murderer of the Sakamotos, Saturo Hatamoto, Pours Out His Regret," *Shukan Yomiuri* (Tokyo) (4 April 1999): 46-47, Open Source Center, FTS 19990726000873.

46. "Killing Took Place amid Aum Power Struggle," *Mainichi Daily News* (Tokyo), (14 September 1995).

47. Ian Reader, *Religious Violence in Contemporary Japan* (Honolulu: University of Hawaii Press, 2000): 150.

48. There were, however, signs of interest in botulinum. Tomomasa Nakagawa told us that in April 1990 Shoko Asahara said that he had first heard of botulism at the time of the birth of his fourth daughter in April 1989. Seiichi Endo had told Asahara that it was not a good idea to give honey to a baby because of the possibility of infant botulism. Nakagawa himself had read about botulism in the popular scientific literature when he was in junior high school. He implied that he did not learn much about botulinum in medical school. Nakagawa further recalled that before becoming a monk, Endo had shown him his laboratory and that he was cultivating bacteria, mostly *E. coli*. Nakagawa asked Endo whether he had the capability of cultivating anaerobic bacteria. Endo became very defensive and asked Nakagawa why he was asking. As he recalled this story, Nakagawa speculated that Endo had assumed that Nakagawa had guessed his plan to grow botulinum. Each became suspicious of the other and believed that the other might have received a special request from Asahara. Nevertheless, they continued their collaboration. Nakagawa was never Endo's assistant because he was not a technician, but a physician, who helped out. Interview with Tomomasa Nakagawa (31 March 2010).

49. Interview with Tomomasa Nakagawa (15 October 2010).

50. Interview with Tomomasa Nakagawa (15 October 2010). A cult member's similar incarceration in such a cell is described in David E. Kaplan and Andrew Marshall, *The Cult at the End of the World* (New York: Crown Publishing, 1996): 23.

51. Interview with Tomomasa Nakagawa (15 October 2010).

52. Interview with Tomomasa Nakagawa (15 October 2010). In the same interview, Nakagawa said that he had heard that Tomomitsu Niimi was bothered, but not too deeply. In court statements and elsewhere, one encounters statements from Aum members indicating that they had doubts or concerns about Aum's activities. With one or two exceptions, there is no indication, however, that these were substantial enough to alter their behavior. Aum leaders made some efforts to quiet concerns by asserting that the chemical and biological programs were necessary to counter expected attacks on the cult using these weapons. See reference 138, below, discussing Masami Tsuchiya's recollection of these discussions. Paranoia led the cult to undertake defensive measures such as building air filter and water distillation systems to protect against poisoning. Tsuchiya describes these systems, explains his doubts and recites his belief that many of Aum's actions were defensive. Masami Tsuchiya, Court Statement, Chapter 4.

53. Interview with Tomomasa Nakagawa (15 October 2010).

54. During the struggle, Tomomasa Nakagawa dropped his Aum badge at Tsutsumi Sakamoto's home. Interview with Tomomasa Nakagawa (15 October 2010).

55. Ian Reader, *Religious Violence in Contemporary Japan* (Honolulu: University of Hawaii Press, 2000): 152–153; and David E. Kaplan and Andrew Marshall, *The Cult at the End of the World* (New York: Crown Publishing, 1996): 44-45.

56. Neither Shoko Asahara's wife, Tomoko Ishii, nor his mistress, Hisako Ishii, were involved in the weapons programs. Fumihiro Joyu believed that Asahara did not trust women to keep secrets. Interview with Fumihiro Joyu (30 March 2010). According to Tomomasa Nakagawa, "They had no relation to armament. They knew about it, but had no involvement or influence [on it]." When asked how Hideo Murai and Joyu got along with the women, Nakagawa responded, "I suspect not well. In their hearts they didn't like the armament programs." When asked how he knew this, Nakagawa stated, "I was the family doctor." Interview with Tomomasa Nakagawa (15 October 2010).

57. Parachini points out that "Aum's success in perpetrating these attacks and eluding law enforcement authorities reinforced the notion that the organization could commit violence and get away with it." John Parachini, "Aum Shinrikyo," in Brian Jackson et al., *Aptitude for Destruction, Vol. 2: Case Studies of Organizational Learning in Five Terrorist Groups* (Santa Monica, CA: RAND, 2005): 15.

58. In addition to asserting numerous electoral law violations by Aum, the press delighted in pointing out the farcical nature of the cult's campaign. Its candidates ran for office under their holy names and dressed in white. Their supporters paraded with gigantic papier-mâché masks of elephants representing the Hindu god Ganesh or the face of Shoko Asahara, chanted songs in praise of their guru and put on dance performances relating to their religious messages and warning of the coming apocalypse. Their platform was a "blend of apocalyptic preaching, calls to end a new consumption tax, and an appeal to utopian socialism." The press continued its exposés of previous Aum scandals and kept alive its suspicions regarding the Tsutsumi Sakamoto family disappearance. David E. Kaplan and Andrew Marshall, *The Cult at the End of the World* (New York: Crown Publishing, 1996): 47.

59. Ian Reader, *Religious Violence in Contemporary Japan* (Honolulu: University of Hawaii Press, 2000): 153-154.

60. David E. Kaplan and Andrew Marshall, *The Cult at the End of the World* (New York: Crown Publishing, 1996): 47; and "Ex-Cultist Pleads Guilty to a Series of Murders," *Mainichi Daily News* (18 April 1996).

61. A midlevel member who worked first on publications and then as a construction worker on the chemical plant later captured the attitude: "The samana, too, had a fundamental loathing of the outside world. 'The unenlightened' – that was their term for people who lived normal lives. Since their people were heading straight for hell, the samana had some choice words for them. For example, they didn't worry about it if they banged into a car belonging to someone from the outside. It was like they were the ones practicing the truth, looking down on everyone else. They were too busy striving for liberation, so even if they put a dent in someone's car, so what?" Haruki Murakami, *Underground: The Tokyo Gas Attack and the Japanese Psyche* (New York: Vintage, 1997, translation 2003): 278-279.

62. Interview with Tomomasa Nakagawa (31 March 2010). According to Nakagawa, Hideo Murai had asked him to search for ways to poison Tsutsumi Sakamoto and make his death appear to be the result of natural causes.

63. Interview with Tomomasa Nakagawa (29 March 2010).

64. Botulism is a serious natural illness that can occur from a toxin produced if the bacterium is present in sealed (i.e., airless or anaerobic) containers.

65. Letter from Tomomasa Nakagawa to Richard Danzig (22 February 2011). In this letter, Nakagawa corrected his assertion from the March 29, 2010, interview, in which he indicated that Seiichi Endo went to the Tokachi River to collect a *C. botulinum* sample. Several sources list the Tokachi River as a site for collecting the bacterium. These include William J. Broad, "Sowing Death: A Special Report; How Japan Germ Terror Alerted World," *The New York Times* (26 May 1998); Amy Smithson, "Ataxia: The Chemical and Biological Terrorism Threat and the US Response," Henry L. Stimson Center (9 October 2000): 75; and Masaki Sugishima, "Biocrimes in Japan," in Masaki Sugishima, ed., *A Comprehensive Study on Bioterrorism* (Gifu, Japan: Asahi University, 2003): 99. Sugishima's account relied on the prosecutors' statements at Shoko Asahara's trial as reported by the Japanese press. Nakagawa initially mentioned that it was possible that someone from Aum went to the Tokachi area as well. Interview with Tomomasa Nakagawa (22 April 2008). In our interviews, Nakagawa pointed in a slightly different direction, saying that a paper published in a Japanese scientific journal (Nakagawa could not recall which one) reported that botulinum was present on Rebun Island, in Hokkaido Prefecture, and that the cult dispatched several members to attempt to harvest it there. He later corrected himself, stating that the location was Okushiri Island, also in Hokkaido Prefecture. Letter from Tomomasa Nakagawa to Richard Danzig (22 February 2011). Kiyohide Hayakawa mentioned that he was one of five people – the others being Shoko Asahara, Nakagawa, Endo and Tomomitsu Niimi – to go to Akanko on Hokkaido as well as Kunashir Island to obtain the toxin from traces in the ground. According to him, Asahara ordered them to go there, and Endo and Nakagawa were assigned to analyze the soil. Interview with Kiyohide Hayakawa (22 April 2008). Nakagawa stated that the members who traveled to Hokkaido were Endo, Hayakawa and Niimi. They also "bought horses there to produce anti-botulinus toxin serum." Letter from Tomomasa Nakagawa to Richard Danzig (22 February 2011).

66. Seiichi Endo's field collection strategies appear to have been both naïve and casual. For example, the cult's much referenced attempt to harvest Ebola during a trip to Zaire from October 22 to October 30, 1992, appears to have been nothing more than Endo's passing thought that they might encounter an Ebola patient during their one-week visit (at the invitation of the government of Zaire) to provide aid to some hospitals. There is no evidence that any of the 16 members of the group pursued this idea while in Zaire. General information on the trip is reflected in Aum's "bulletin," a glossy monthly publicity vehicle. Interview with Tomomasa Nakagawa (22 April 2008); and David E. Kaplan and Andrew Marshall, *The Cult at the End of the World* (New York: Crown Publishing, 1996): 97.

67. Interview with Tomomasa Nakagawa (22 April 2008). According to Nakagawa, fermenters were made, not bought, and did not function well. Making, rather than buying, was the Shoko Asahara way. The reason was not financial. In the early 1990s, there was "as much money as was needed."

68. Subsequently, some supplemental material may have been obtained from a culture collection in South America.

69. Interview with Fumihiro Joyu (21 April 2008). Presumably these were the toxic *C. botulinum* strains, A-E.

70. Interview with Tomomasa Nakagawa (29 March 2010). Also see Appendix C: Biological Weapons Incidents Chart Provided by Tomomasa Nakagawa, which describes these fermenters as measuring 2 meters by 2 meters by 2.5 meters. Nakagawa later explained that these fermenters were at Kamikuishiki site Number 1 where Satyans 2 and 5 were later built. Letter from Tomomasa Nakagawa to Richard Danzig (30 March 2011).

71. Interviews with Tomomasa Nakagawa (31 March 2010) and Fumihiro Joyu (30 March 2010).

72. For consistency, the authors refer to all measurements in this report using the metric system. For simplicity and because larger numbers are only estimates, we have not distinguished between Imperial tons (i.e., 2,000 pounds) as that measure is used in the United States and metric tons (i.e. 1,000 kilograms or slightly less than 2,205 pounds, as used in Japan; this weight was sometimes referred to by our informants as "tonnes"). We have also translated liters into kilograms at the standard conversion for water (that is, one liter equals one kilogram, or approximately 2.2 pounds), though the specific gravity of the liquids described here might affect that ratio slightly.

73. Interview with Tomomasa Nakagawa (29 March 2010). Also see Appendix C: Biological Weapons Incidents Chart Provided by Tomomasa Nakagawa.

74. Interview with Tomomasa Nakagawa (12 October 2010).

75. Interviews with Tomomasa Nakagawa (29 and 31 March 2010). This assay is highly sensitive and reliable.

76. Interview with Tomomasa Nakagawa (29 March 2010). In this interview, Nakagawa reported that one mouse died after exposure to Seiichi Endo's material, perhaps from natural causes or as a consequence of injection trauma. In a later interview, however, Nakagawa said that "more than 100" mice died in the testing. Nakagawa said that he could not explain why these mice died, but he did not think that it was the result of a potent botulinum toxin-

producing strain. When asked how the other Aum members interpreted the results, Nakagawa said that Shoko Asahara thought this showed evidence of an effective botulinum weapon. Nakagawa said that they were administering different doses to different mice, and, screening at different stages it was therefore plausible to Asahara that only some would die. Interview with Tomomasa Nakagawa (12 October 2010). Fumihiro Joyu seemed to recall that some mice had died as well, but not from a potent biological agent. He indicated that he had heard that a significant number of mice were tested for botulinum in 1989, but that the mice lived even after they received the biological agent. Some might have died, but this was because they received too large a dose. Interview with Fumihiro Joyu (21 April 2008). Nakagawa knew of no other animal testing and stated that reports of testing on sheep in Australia were Internet rumors. Interview with Tomomasa Nakagawa (12 October 2010). We comment on the possibility of sheep testing in Appendix E.

77. Kenichi Hirose, convicted and imprisoned for his role in the sarin subway attacks, communicated information about his involvement in Aum's biological weapons program. Copy of private letter from Kenichi Hirose obtained by the authors (16 June 2011). Translated from Japanese by Takahiro Araki.

78. In addition to evidencing contamination, this finding indicated the presence of oxygen. Natto is composed of *B. subtilis*, an oxygen-dependent bacterium. Because Seiichi Endo was responsible for growing food as well as pathogens, it is possible that he inadvertently introduced this contamination. Interview with Tomomasa Nakagawa (29 March 2010). Also see Appendix C: Biological Weapons Incidents Chart Provided by Tomomasa Nakagawa in which he notes the presence of *B. subtilis* as a contaminant in this botulinum production.

79. Kenichi Hirose noted that Aum had "many vehicles such as ten ton trucks and buses." Copy of a private letter from Kenichi Hirose obtained by the authors (16 June 2011). Translated from Japanese by Takahiro Araki. For this dissemination each truck was equipped with "six hidden vents." Brian Christopher Dodwell, "Technical Aspects of Chemical and Biological Terrorism: The Case of Aum Shinrikyo," www8.georgetown.edu/centers/cndls/applications/postertool/index.cfm?fuseaction=poster.display&posterID=860, accessed on June 28, 2011.

80. "Chronology of Aum Shinrikyo's CBW Activities," Monterey Institute of International Studies (2001), www.cns.miis.edu/reports/pdfs/aum_chrn.pdf.

81. Ian Reader, *Religious Violence in Contemporary Japan* (Honolulu: University of Hawaii Press, 2000): 158.

82. Namino, Japan is a town in the Aso Mountain range. A similar pattern of land acquisition, local resistance and protracted conflict played out in the Kamikuishiki commune.

83. The plot consisted of woodland, which required special permission for development. The municipality sought to stop Aum's construction, and Aum followers responded by accusing it of religious persecution. There were frequent confrontations between monks and the local population. Aum had misrepresented the purchase as a gift to avoid taxes. Ian Reader, *Religious Violence in Contemporary Japan* (Honolulu: University of Hawaii Press, 2000): 165-166.

84. The three were Kiyohide Hayakawa, acting as the buyer; Hisako Ishii, as the accountant; and Yoshinobu Aoyama, as the attorney.

85. Interview with Fumihiro Joyu (30 March 2010).

86. Ian Reader, *Religious Violence in Contemporary Japan* (Honolulu: University of Hawaii Press, 2000): 166-168. Eventually, the courts ruled against the village and suggested that it buy back the land from Aum to resolve the situation. Both sides acquiesced, and in 1994 the village paid Aum 7 to 8 million dollars to return the land.

87. Interview with Fumihiro Joyu (30 March 2010).

88. For example, Tomoko Ishii, who had long been the most powerful influence on Shoko Asahara and his inseparable mistress, had a miscarriage in the spring of 1990 and then delivered twins in 1991. She also had a third child by Asahara.

89. David E. Kaplan and Andrew Marshall, *The Cult at the End of the World* (New York: Crown Publishing, 1996): 33.

90. Yoichiro Aonuma, "Extraordinary Court Trial Report: Visiting the Ridiculous Court Trial Sessions," *Tokyo Gendai* (1 June 1999): 336–346, Open Source Center, FTS 19990625000739.

91. For example, Tomomasa Nakagawa observed that after initial enthusiasm for digging for uranium in Australia ebbed, this program was abandoned. He said that "things were not crisply terminated, just pushed aside." Weapons of mass destruction "[were] not pursued in a planned, meticulous way." Interview with Tomomasa Nakagawa (12 October 2010).

92. Interview with Tomomasa Nakagawa (29 March 2010). This seems at odds with statements from Aum members citing popular Japanese culture as the inspiration for various ideas within the cult's leadership.

93. Interview with Fumihiro Joyu (30 March 2010).

94. Interview with Fumihiro Joyu (30 March 2010).

95. Naruhito Noda was born in 1967 and studied physics at Tokyo University. He had dreams of becoming a Nobel Laureate in Physics, but these evaporated when he failed his year-end exams in his third year in 1987. He picked up a volume by Shoko Asahara in a bookstore and decided to go to a session. Four months later, in October 1987, he became a monk. Interview with Naruhito Noda (30 March 2010).

96. Interview with Fumihiro Joyu (30 March 2010).

97. David E. Kaplan and Andrew Marshall, *The Cult at the End of the World* (New York: Crown Publishing, 1996): 127. See also Appendix E: Testing Sarin in Australia? for a discussion of this property as a possible test site for sarin.

98. According to Kiyohide Hayakawa, there was a "rumor," which originated with Tomomasa Nakagawa and Seiichi Endo, that despite attempts to harvest *C. botulinum* from the environment, Endo ultimately obtained a small amount of *C. botulinum* from South America "for research." Interview with Kiyohide Hayakawa (22 April 2008). Nakagawa, however, has written us that although there was discussion of possibly trying to harvest *C. botulinum* from natural

sources in South America, "I have never heard that Aum had successfully gotten the botulinus stock from South America." Letter from Tomomasa Nakagawa to Richard Danzig (30 March 2011).

99. Tomomasa Nakagawa's note on the drum fermenters (Figure 1) indicates that 10 tons were produced from 50 drums in each production run. As we have described, this is probably an over-estimate, and the resulting unpurified broth contained mostly media, but the resulting quantities were apparently in the scores of tons.

100. From a chart enclosed with letters from Tomomasa Nakagawa to Richard Danzig (22 April 2008 and 28 September 2010). This chart is reproduced in this report as Appendix C: Biological Weapons Incidents Chart Provided by Tomomasa Nakagawa. Nakagawa indicated on the chart that he was unsure when the latter event took place and described it as "hearsay."

101. See Appendix C: Biological Weapons Incidents Chart Provided by Tomomasa Nakagawa. Chart of Aum Shinrikyo's biological attacks provided by Nakagawa.

102. According to Tomomasa Nakagawa, "(Seiichi) Endo strongly insisted to spray 'his' botulinum toxin at the same time" as sarin was disseminated from a separate sprayer in the trunk of a car. Letter from Tomomasa Nakagawa to Richard Danzig (30 March 2011).

103. Tomomasa Nakagawa indicated that producing anthrax seemed simpler and that Seiichi Endo was confident, so they thought they could succeed. Interview with Tomomasa Nakagawa (12 October 2010).

104. Interview with Tomomasa Nakagawa (22 April 2008). In the same interview, Nakagawa recalls, "I phoned [the Centers for Disease Control and Prevention] and talked with someone there. But I stopped and hung up when they began inquiring as to who I was and why I wanted it."

105. Interview with Tomomasa Nakagawa (29 March 2010). We do not have information about this alleged attempt at theft.

106. Interview with Tomomasa Nakagawa (22 April 2008); and interview with Fumihiro Joyu (21 April 2008). Nakagawa believed that Seiichi Endo "bought" the anthrax from this source.

107. Amy Smithson also speculates that the anthrax strain was obtained from a sympathizer at Tsukuba University, near Aum's headquarters. Amy Smithson, "Ataxia: The Chemical and Biological Terrorism Threat and the US Response," Henry L. Stimson Center (October 2000).

108. Email from Sou-ichi Makino to Richard Danzig (12 May 2008). The parenthetical references were included in the original email, but the authors have added the information in brackets. The authors have not modified the imperfections in language contained in the email message.

109. Paul Keim et al., "Molecular Investigation of the Aum Shinrikyo Anthrax Release in Kameido, Japan," *Journal of Clinical Microbiology* 39, 12 (December 2001): 4566–4567.

110. Personal communication from Paul Keim to Terrance Leighton (29 November 2010).

111. Peter C.B. Turnbull, "Anthrax Vaccines: Past, Present and Future," *Vaccine* 9, 8 (1991): 533–539.

112. According to Tomomasa Nakagawa, Seiichi Endo bought a small amount of anthrax in 1989, which Endo knew was a vaccine strain. Nakagawa doubted that Endo would be able to convert it to a potent strain through "heat shock," but Shoko Asahara seemed to believe that Endo could. After the failure of the 1993 effort to spray anthrax from the top of Aum's headquarters, some believed that the sprayer was at fault, but at that point, Nakagawa told Asahara that he thought "the strain was bad." Interviews with Tomomasa Nakagawa (22 April 2008 and 29 March 2010); and interview with Fumihiro Joyu (21 April 2008).

113. This hypothesis was first developed in separate comments by Michael Callahan of the Defense Advanced Research Project Agency and Terrance Leighton in response to information from Danzig's 2008 interviews. We are indebted to Callahan for his insights on this point and for his very helpful comments on this manuscript.

114. Interview with Sou-ichi Makino (1 April 2010).

115. Plasmids are extra-chromosomal genetic materials.

116. A.S. Stepanov, "Transduction and Conjugation Transfer of the pXO2 Plasmid in *Bacillus anthracis*," *Molekuliarnaia Genetika, Mikrobiologia, I Virusologia* 12 (1989): 39-43.

117. S. Makino, et al., "Cloning and CO2-Dependent Expression of the Genetic Region for Encapsulation from *Bacillus anthracis*," *Molecular Microbiology* 2 (1988): 371-376.

118. Tomomasa Nakagawa writes, "(Seiichi) Endo had a CO_2 incubator in his laboratory. And. . .we had drum fermenters with an air supply system. We could cultivate anthrax under CO_2 atmosphere if we wanted. But I forgot whether we actually mixed CO_2 with air or not in the plants." Letter from Tomomasa Nakagawa to Richard Danzig (4 August 2010).

119. We note, however, that we have not had an opportunity to show this picture to Fumihiro Joyu or to Tomomasa Nakagawa. When we showed a comparable, though less vivid, image of encapsulated anthrax to Nakagawa, he said, "I forgot the view, what I had seen. But I can say that they were not like [this photograph] at all." Letter from Tomomasa Nakagawa to Richard Danzig (4 August 2010).

120. Interview with Sou-ichi Makino (1 April 2010).

121. Interview with Sou-ichi Makino (1 April 2010). Makino stated that the conjugation plasmid transfer method was more efficient, but it required specialized *Bacillus* strains that were not widely available.

122. These frequencies contain fewer than $1{:}10^{-6}$ to $1{:}10^{-8}$ viral particles.

123. Techniques exist today that simplify isolating a capsulated strain, but they require specific reagents that are not commonly available.

124. According to Kiyohide Hayakawa, "I thought the incubation failed. I had inhaled a lot – so much to the extent that it would have canceled out the effect of antibiotics – while dispensing it in June 1993 and so had Seiichi

Endo and Inoue and since we didn't have ill effects at all, I thought it was not effective." Interview with Kiyohide Hayakawa (22 April 2008). Members working on the anthrax program felt they were protected by drinking a liter or so of pink liquid once a day. Tomomasa Nakagawa had infused the liquid with penicillin, which he had obtained from Aum's hospital, and it probably provided some, but limited, protection. Interview with Tomomasa Nakagawa (22 April 2008). Faith in the supreme leader's embrace of this prescription reassured the participants.

125. Among these attacks was one that was apparently intended to target a parade celebrating the wedding of Crown Prince Naruhito on June 9, 1993. Tomomasa Nakagawa said that he thought that this was Shoko Asahara's intention. Naruhito Noda was tasked with recording wind direction data for the month preceding the planned attack using an anemometer attached to his notebook computer. He apparently did not record any data, however, and Aum subsequently could not determine in which directions the released anthrax would likely disperse. Letter from Tomomasa Nakagawa to Richard Danzig (25 May 2010).

126. Also see Appendix C: Biological Weapons Incidents Chart Provided by Tomomasa Nakagawa.

127. Interview with Naruhito Noda (30 March 2010).

128. Letter from Tomomasa Nakagawa to Richard Danzig (25 May 2010). In the same letter, Nakagawa recalls that during the Kameido disseminations around the same time, "[t]he sprayer was on the top floor. The pump to push up the medium from the top floor caught fire by overload. . .While spraying July [*sic*]. Toru Toyota and I with mops and buckets stood by the engine to make high pressure for sprayer. With mops we wetted the engine to cool its heat and with buckets we received the leaked medium for the pipes and, at the end of the spraying from the engine itself."

129. This calculation assumes growth in complex media to a maximal cell density of approximately one billion cells/milliliter. If defined culture media were used, the cell density and corresponding dry weight would be reduced by approximately ten times.

130. Tomomasa Nakagawa's chart of biological attacks shows this spraying as occurring in the center of Tokyo. See Appendix C: Biological Weapons Incidents Chart Provided by Tomomasa Nakagawa.

131. Interview with Tomomasa Nakagawa (31 March 2010). Naruhito Noda reports that the cult sprayed the liquid anthrax twice and later the dry powder twice.

132. Interview with Fumihiro Joyu (21 April 2008).

133. This was also the view offered by the prosecution in its statement at the sarin trials. The Prosecution Statement (25 April 1996) is reprinted in Volume 2 of *The Asahi Shimbun*'s 13-volume reproduction of important trial documents. These volumes are in Japanese. The staff of Japan's Research Institute of Science and Technology for Society summarized key information at our request. Defects in this mechanical process could have killed fragile *B. anthracis* vegetative cells, but they would have been less likely to kill spores. The other explanations are more probable. In a leading review article, Michèle Mock and Agnès Fouet comment that "[u]nlike pXO1, pXO2 is easily and spontaneously lost." Michèle Mock and Agnès Fouet, "Anthrax," *Annual Review of Microbiology* 55 (October 2001): 651.

134. Letter from Tomomasa Nakagawa to Richard Danzig (30 March 2011).

135. Masami Tsuchiya states, "Around the 20th of June, Seiichi Endo said, you now work under me. [The defendant] heard about the introduction of the ministry system around the time that the order came to attend the opening ceremony. Endo, the defendant and the others were to be in the Ministry of Health, Endo was the Health Minister, and the defendant the vice minister under him." Masami Tsuchiya, Court Statement, Chapter 4: 2.

136. Interview with Masami Tsuchiya (30 March 2010).

137. Interview with Masami Tsuchiya (31 March 2010).

138. Masami Tsuchiya, Court Statement, Chapter 4 describes the initial characterization of the threat as general, with chemical weapons as a means of deterrence. Hideo Murai is said to have pointed to the Chinese takeover of Tibet. Tsuchiya told the Japanese court that he visited the library, conducted research and went through the following thought process: "In October 1950, the Chinese People's Liberation Army invaded Tibet and destroyed the Tibetan army, which comprised fewer than 6,000 soldiers and fielded only conventional weapons. According to Murai if Aum Shinrikyo were attacked, the opponent would be a world-class military. If that were the case, then having conventional weapons would be meaningless, and furthermore they had absolutely no know-how to make soldiers of the samanas and the followers: militarization was impossible. The only option was to make up for this with the quality of the weapons. In that case, there were chemical weapons, the so-called poor man's nukes. If Aum Shinrikyo had chemical weapons for self-defense, that alone would deter the enemy. This was the defendant's conclusion." Later, this evolved into a theory that the cult was being attacked with chemical weapons. In an interview with the authors, Tsuchiya recalled being told in March 1994 by Shoko Asahara that the odor emanating from Satyan 7 on a daily basis was evidence that Aum had been attacked. Later in the same interview, Tsuchiya recalled that he told Murai – also in March 1994 – that he smelled mustard gas at the compound. Murai also claimed this to be proof that Aum was under attack. Interview with Masami Tsuchiya (2 April 2010). It is unclear whether these are two separate incidents or different descriptions of the same chemical odor.

139. Masami Tsuchiya, Court Statement, Chapter 4; and interview with Masami Tsuchiya (2 April 2010).

140. The program is vividly described in David Hoffman, *The Dead Hand* (New York: Anchor Books, 2010); and by a participant in Vil Mirzayanov, *State Secrets* (Denver: Outskirts Press, 2009).

141. Interview with Masami Tsuchiya (31 March 2010).

142. Interview with Masami Tsuchiya (29 March 2010). Tomomasa Nakagawa comments that "[i]n the spring of 1993, at the latest, at a laboratory in Satyan No 1. Fujinomiya, Tsuchiya began to research on sarin production. Because Tsuchiya had come into the research little by little, since the beginning of 1993, it might be difficult even for Tsuchiya to say clearly when he had started it." Nakagawa cites evidence from his own trial showing that in April 1993 Aum ordered isopropyl alcohol (six liters), a kilogram of PCl_5 and half

kilograms of $P(OCH_3)_3$ and CH_3I. From this he infers that Tsuchiya had begun his work on sarin by April. Letter from Tomomasa Nakagawa to Richard Danzig (30 March 2011).

143. Parachini writes that "the most telling evidence is that the samples of sarin examined by the Japan Self Defense Agency chemical weapons experts revealed that it is synthesized in a fashion that is unique to the Soviet arsenal of chemical agents." John Parachini, "Aum Shinrikyo," in Brian Jackson et al., *Aptitude for Destruction, Vol. 2: Case Studies of Organizational Learning in Five Terrorist Groups* (Santa Monica, CA: RAND, 2005): 24. See also his comments on pp. 33-34, in which he states that the Russian material was "transformational" and just enough to enable Aum to overcome its limitations. As a source for these comments, Parachini cites a "personal interview with a senior JDA official, Tokyo, January 2004."

144. As described below, Russian materials may have assisted in designing the mass production plant once the sarin process had been developed.

145. Interview with Masami Tsuchiya (31 March 2010).

146. Interview with Masami Tsuchiya (31 March 2010).

147. Interview with Masami Tsuchiya (31 March 2010).

148. Fumihiro Joyu was involved. Interview with Fumihiro Joyu (30 March 2010).

149. David E. Kaplan and Andrew Marshall, *The Cult at the End of the World* (New York: Crown Publishing, 1996): 119.

150. Letter from Tomomasa Nakagawa to Richard Danzig (30 March 2011).

151. Interview with Masami Tsuchiya (31 March 2010). The shell companies were called Beck and Belle Epoch. See also Ian Reader, *A Poisonous Cocktail? Aum Shinrikyo's Path to Violence* (Copenhagen: Nordic Institute of Asian Studies, 1996): 74.

152. The facility no longer exists. The Japanese government designated the Satyan 7 site as a chemical weapons factory on May 29, 1997, one month after the Convention on the Prohibition of Chemical Weapons took effect. It was destroyed in 1998. Organization for the Prevention of Chemical Weapons, Conference of the States Parties, Fourth Session (2 July 1999).

153. Interview with Masami Tsuchiya (31 March 2010).

154. Organization for the Prevention of Chemical Weapons, *Chemical Disarmament* 2 (December 2004): 24. The Organization for the Prevention of Chemical Weapons was founded in April 1997 as an implementing organization for the Chemical Weapons Convention. Had it existed at the time Satyan 7 was built, it would have established a reporting requirement that probably would have given Aum's work greater visibility. On the other hand, driven by concerns about cost and toxic waste, the chemical industry has, over the last decade, introduced modular and flexible designs where reactions may occur in a solvent-free environment, at increased concentrations and in much smaller and less expensive facilities. The authors return to this point in the conclusion.

155. Interview with Masami Tsuchiya (31 March 2010).

156. As described above, botulinum toxin was also used in this attack, with separate sprayers dispersing the two substances. Interview with Tomomasa Nakagawa (2 April 2010).

157. Sarin is not flammable, but the final preparation was likely to contain the flammable solvent hexane, which was used in the synthetic process.

158. Letter from Tomomasa Nakagawa to Richard Danzig (25 November 2010).

159. Aum required protective chemical suits for all mixing and dispensing operations, but not for field operations. Tomomasa Nakagawa, in charge of all health and safety operations, had prepared the atropine antidote. His view was that although atropine was the better known antidote, pralidoxime iodine (2-pyridine aldoxime methiodide) was the more effective of the two. Letter from Tomomasa Nakagawa to Richard Danzig (30 March 2011).

160. Kazuyoshi Takizawa was succeeded by Hideo Murai in April 1994. In Masami Tsuchiya's view, conditions worsened under Murai. For example, equipment was allowed to corrode because of poorly contained phosphorus trichloride stocks, and there were production accidents. Interview with Masami Tsuchiya (2 April 2010).

161. Anthony T. Tu, "Overview of Sarin Terrorist Attacks in Japan," *ACS Symposium Series* 745 (2000): 304–317.

162. In pure form, diisopropyl methylphosphonate (DIMP) is colorless.

163. Nobuo Yanagisawa, Hiroshi Morita and Tamie Nakajima state that 12 liters of 70 percent purity were used in the Matsumoto attack, and it appears to have come from the production described above. Nobuo Yanagisawa, Hiroshi Morita and Tamie Nakajima, "Sarin Experiences in Japan: Acute Toxicity and Long-term Effects," *Journal of the Neurological Sciences* 249, 1 (1 November 2006): 76-85. This accords with Tomomasa Nakagawa's statement that 12 liters of sarin were loaded into the truck, with four liters loaded into each of the truck's three sprayers. Letter from Tomomasa Nakagawa to Richard Danzig (1 November 2010).

164. Interview with Masami Tsuchiya (2 April 2010).

165. Masami Tsuchiya states that he turned over processes for manufacturing lysergic acid diethylamide and sodium pentothal to Seiichi Endo. He also states that he complained to Hideo Murai that producing the gunpowder with the equipment he had at his disposal was impossible. Murai did not respond. Interview with Masami Tsuchiya (2 April 2010).

166. As described in the timeline on pages 18 and 19 of this report, Aum used VX in September 1994 in an attempt to assassinate a lawyer, Taro Takimoto. Tomomasa Nakagawa also describes other VX assassination attempts on December 2, 1994 (against Noboru Mizuno), December 12, 1994 (against Takahito Hamaguchi), January 4, 1995 (against Hiroyuki Nagaoka), and at the end of January 1995 (against Ryuho Ohkawa). Letter from Tomomasa Nakagawa to Richard Danzig (30 March 2011).

167. Letter from Tomomasa Nakagawa to Richard Danzig (30 March 2011).

168. In 1991 Aum purchased land in Matsumoto City to use for a branch office and a factory for food processing. A local government rule stated that land transactions involving more than 500 square meters required the prefectural

governor's approval. To circumvent this rule, Aum purchased one part of the property, and a real estate agent purchased another part and leased the land to Aum. The seller of the land sued Aum for dishonest practices. On January 17, 1992, the court ruled in the seller's favor. Despite this ruling, Aum built on the land that it had purchased. The seller sued Aum again, requesting that it stop building, and asked for the return of the property.

169. According to David E. Kaplan and Andrew Marshall, "The sarin would be kept in a large container bolted to the truck's load platform. The container was attached to a powerful electric heater run on thirty large batteries. The nerve agent would drip onto the heater and vaporize, then a fan system would blow the gas through a small window in the truck's side. The technical team had already tested the fan on a flood plain near the Fuji River estuary – using real sarin. Still, the vehicle's redesign was imperfect. The batteries that powered the atomizer weighed a total of 1,000 pounds and filled a third of the truck." David E. Kaplan and Andrew Marshall, *The Cult at the End of the World* (New York: Crown Publishing, 1996): 139.

170. Brian Christopher Dodwell, "Technical Aspects of Chemical and Biological Terrorism: The Case of Aum Shinrikyo," www8.georgetown.edu/centers/cndls/applications/postertool/index.cfm?fuseaction=poster.display&posterID=860, accessed on June 28, 2011.

171. According to Kyle Olson, who reported on this incident, "The person[s] responsible for Matsumoto certainly understand now that a significant quantity of nerve gas delivered into a warm, crowded urban area (such as a Ginza department store, or major subway station) could have catastrophic consequences…" Kyle B. Olson, "The Matsumoto Incident: Sarin Poisoning in a Japanese Residential Community," *Chemical and Biological Arms Control Institute* (December 1994): 5.

172. David E. Kaplan and Andrew Marshall, *The Cult at the End of the World* (New York: Crown Publishing, 1996): 144. An anonymous letter distributed to the Japanese press pointed to the cult. Kaplan and Marshall comment that "[w]hoever the writer was, he or she was surprisingly familiar with the fine details of the Matsumoto attack." See page 146.

173. David E. Kaplan and Andrew Marshall, *The Cult at the End of the World* (New York: Crown Publishing, 1996): 141.

174. Interview with Yosuke Yamasato (31 March 2010).

175. Interview with Yosuke Yamasato (31 March 2010).

176. "Sarin Compound Affected Villagers near Mt. Fuji," *Yomiuri Shimbun* (1 January 1995).

177. Interview with Tomomasa Nakagawa (1 April 2010).

178. He was to do this with Na_2CO_3 aqueous and its precursors. The chemical agents in the KG building were destroyed by alkaline hydrolysis.

179. Robert Lifton, *Destroying the World to Save It* (New York: Owl Books, 2000): 33; and Ian Reader, *Religious Violence in Contemporary Japan* (Honolulu: University of Hawaii Press, 2000): 213.

180. Some were later recovered by Japanese police. Interview with Yosuke Yamasato (31 March 2010). Masami Tsuchiya said that he was ordered to take some of the material to Yeasu, in Tokyo. Interview with Masami Tsuchiya (2 April 2010).

181. Amy Smithson, "Ataxia: The Chemical and Biological Terrorism Threat and the US Response," Henry L. Stimson Center (October 2000): 101.

182. David E. Kaplan and Andrew Marshall report that Aum conducted a test run with sarin at a Tokyo subway station and that it was foiled by an inside saboteur. David E. Kaplan and Andrew Marshall, *The Cult at the End of the World* (New York: Crown Publishing, 1996): 236. Our interviews do not support this statement.

183. Interview with Masami Tsuchiya (2 April 2010).

184. Six to seven liters of sarin were produced with a purity of 35 percent.

185. Amy Smithson, "Ataxia: The Chemical and Biological Terrorism Threat and the US Response," Henry L. Stimson Center (October 2000): 89.

186. H. Ando and Y. Miyata, "Sarin and Its Decomposition Products," in Osamu Suzuki and Kanako Watanabe, eds., *Drugs and Poisons in Humans* (Berlin: Springer-Verlag, 2005); and Y. Ogawa et al., "An Attack with Sarin Nerve Gas on the Tokyo Subway System and Its Effects on Victims," *Natural and Selected Synthetic Toxins* 745 (20 December 1999): 333–355.

187. Nobuo Yanagisawa, Hiroshi Morita and Tamie Nakajima, "Sarin Experiences in Japan: Acute Toxicity and Long-term Effects," *Journal of the Neurological Sciences* 249, 1 (1 November 2006): 76-85.

188. "Victims of 1995 Aum Tokyo Subway Sarin Gas Attack Near 6,300," *Japan Today* (11 March 2010), www.japantoday.com/category/crime/view/victims-of-1995-aum-tokyo-subway-sarin-gas-attack-near-6300. In response to a 2008 law, 6,583 people claimed government compensation for injuries attributed to eight Aum attacks. "Police Final Tally Confirms 6,583 Fell Victim to 8 Aum-related Crimes," Kyodo News Service (20 December 2010).

189. Koichi Miyaki et al., "Effects of Sarin on the Nervous System of Subway Workers Seven Years after the Tokyo Subway Sarin Attack," *Journal of Occupational Health* 47 (2005): 299–304. Diisopropyl methylphosphonate and diethyl methylphosphonate sarin synthesis byproducts identified in the Aum material were shown to have genotoxic effects and to affect immune cell functions including inhibition in a dose-dependent manner of splenic natural killer cell (NK) and cytotoxic T lymphocyte activities of mice and the NK activity of human peripheral blood lymphocytes in vitro. Qing Li et al., "The By-products Generated During Sarin Synthesis in the Tokyo Sarin Disaster Induced Inhibition of Natural Killer and Cytotoxic T Lymphocyte Activity," *Toxicology* 146 (May 2000): 209–220.

190. Koichi Miyaki et al., "Effects of Sarin on the Nervous System of Subway Workers Seven Years after the Tokyo Subway Sarin Attack," *Journal of Occupational Health* 47 (2005): 299–304.

191. These included abnormalities in the cognitive function event-related potential P300, visual evoked potentials and digit span psychomotor function tests.

192. According to Robert Lifton, Seiichi Endo was described by those around him as Aum's "most consistent scientific bungler." Robert Lifton, *Destroying the World to Save It* (New York: Owl Books, 2000): 157.

193. The classic work on the difference between theoretical and practical knowledge is Michael Kenney's *From Pablo to Osama*. Kenney calls explicit theoretical knowledge "techne" and practical knowledge "metis" and has produced several similar analyses for drug trafficking and terrorism. In Aum, although some of the conspirators had techne, they lacked metis, which led to failure. Michael Kenney, *From Pablo to Osama: Trafficking and Terrorist Networks, Government Bureaucracies, and Competitive Adaptation* (University Park, PA: Penn State University Press, 2007): 49-77. See also H.M. Collins, "Tacit Knowledge, Trust and the Q of Sapphire, *Social Studies of Science* 31 (2001): 71-85. Brian Jackson and his coauthors comment on applying this distinction for terrorist groups, for example, how the Provisional Irish Republican Army had to acquire tacit knowledge to effectively mount mortar attacks. Brian Jackson et al., *Aptitude for Destruction, Vol. 2: Case Studies of Organizational Learning in Five Terrorist Groups* (Santa Monica, CA: RAND, 2005). See particularly xiv, 14-15, 47 and 186.

194. Masami Tsuchiya produced approximately three liters of sarin at approximately 90 percent purity. Aum faced hurdles in moving to larger-scale chemical weapons production. Errors were made and purity fell by some 20 percent. Even at this level, however, Aum had a potent sarin weapon, and only extraneous factors (particularly fear of a police raid that caused it to dismantle this capability) led to its using only 35 percent sarin in the Tokyo subway attacks.

195. Micro-components require expertise to assemble and have some problems of their own, particularly if their small channels are blocked by impurities. However, they are available for thermal control, mixing, laminar flow, reactor vessels and catalysis and permit reactions at higher temperatures and pressures, instant mixing of reagents and reactants, stable intermediates, and tight control of both exothermic and endothermic reactions. Desktop micro-reactors are now being offered that can provide tons per year of continuous synthetic output by laptop flow chemistry control. For examples, see ThalesNano, "H-Cube Maxi: Production Synthesis without Limitations," www.thalesnano.com/print/311; and Syrris, "Flow Products," www.syrris.com/flow-products. For documentation and expansion of these points, see Volker Hessel, Patrick Lob and Holger Lowe, "Development of Microstructured Reactors to Enable Organic Synthesis Rather Than Subduing Chemistry," *Current Organic Chemistry* 9 (May 2005): 765–787; Volker Hessel et al., "Polymerisationen in mikrostrukturierten Reaktoren: Ein Überblick," *Chemie, Ingenieur, Technik* 77 (2005): 39–59; F. Schönfeld, Volker Hessel and C. Hofmann, "Optimised Split-and-Recombine Micro Mixer with Uniform 'Chaotic' Mixing," *Lab on a Chip* 4 (2004): 65–69; and Shengqing Xu et al., "Generation of Monodisperse Particles by Using Microfluidics: Control over Size, Shape, and Composition," *Angewandte Chemie International Edition* 44, 5 (2005): 724–728.

196. For an explanation of the difficulties, see E.A. Szabo et al., "Application of PCR to a Clinical and Environmental Investigation of a Case of Equine Botulism," *Journal of Clinical Microbiology* 32 (August 1994): 1986–1991; Andreas H.W. Hauschild, "*Clostridium botulinum*," in Michael P. Doyle, ed., *Foodborne Bacterial Pathogens* (New York: Marcel Dekker, 1989); and L.D. Smith, "The Occurrence of *Clostridium botulinum* and *Clostridium tetani* in the Soil of the United States," *Health Lab Science* 15 (April 1978): 74–80.

197. Interview with Tomomasa Nakagawa (31 March 2010).

198. We note that accidents may provide opportunities for intelligence observation.

199. Some, such as Fumihiro Joyu, transferred abroad, but we do not know whether this step was related to reservations about the direction the cult was taking. It is possible that there was some self-selection among leaders regarding participation in violence. A few women were aware of violent acts or played minor roles in some production activities, but in the main roles their absence from biological and chemical planning is notable.

200. Haruki Murakami, *Underground: The Tokyo Gas Attack and the Japanese Psyche* (New York: Vintage, 1997, translation 2003): 227. Murakami quotes the explanation of an Aum monk that he could not make decisions about using violence, but Shoko Asahara and others who could discern the "transmigration" of a soul could properly make those decisions.

201. Other weapons of mass destruction programs (e.g., the South African biological program, Project Coast) have had this attribute.

202. We note, however, that these conditions can be replicated within the territory of "failed states" or remote regions of more structured societies.

203. David E. Kaplan and Andrew Marshall, *The Cult at the End of the World* (New York: Crown Publishing, 1996): 148–149.

204. Many have noted that Aum's status as a religious organization made the authorities reluctant to investigate it. David E. Kaplan and Andrew Marshall observe, "Aum was aggressive, confrontational, and quick to strike back with lawsuits and charges of religious persecution. All in all, not the kind of group handled well by most Japanese, who prefer an indirect, less confrontational way of getting along." Moreover, "[o]ne key factor was that Japan's decentralized police system had no national investigative authority like the FBI"; therefore Aum's crimes were less visible across a number of jurisdictions. David E. Kaplan and Andrew Marshall, *The Cult at the End of the World* (New York: Crown Publishing, 1996): 148-149.

205. This observation does not apply to those who steal weapons.

206. Although as described above, this preference also related to an ethic of independence, an ingrained propensity to overestimate its capabilities and sometimes a desire for speed or conservation of funds.

207. Aum operated in a world before cell phones. We note though that because the leaders were collocated, concentrating their weapons of mass destruction activities would have made them less vulnerable to detection through communications intercepts.

208. David E. Kaplan and Andrew Marshall assert that as Aum geared up for military action it made special efforts to recruit from Japan's First Airborne Division. They write, "Aum recruiters obtained internal lists of personnel and sent young female believers to a bar frequented by the soldiers." David E. Kaplan and Andrew Marshall, *The Cult at the End of the World* (New York: Crown Publishing, 1996): 155.

209. According to David E. Kaplan and Andrew Marshall, "Aum set up twenty-four ministries that eerily reflected the Japanese state its members were so eager to destroy. David E. Kaplan and Andrew Marshall, *The Cult at the End of the World* (New York: Crown Publishing, 1996): 157. Also see Table 1.

210. Kyle B. Olson was prescient in noting that the June 1994 sarin attack at Matsumoto could foreshadow a more significant attack to come. After visiting Matsumoto in December 1994, he wrote, "There is compelling evidence that whatever the complete story of that deadly June night turns out to be, the events in that quiet city were anything but accidental. This case deserves further attention as the potential harbinger of the next phase of terrorist horror." Kyle B. Olson, "The Matsumoto Incident: Sarin Poisoning in a Japanese Residential Community," *Chemical and Biological Arms Control Institute* (December 1994): 5.

211. David E. Kaplan, "Chapter 12: Aum Shinrikyo (1995)," in Jonathan B. Tucker, ed., *Toxic Terror: Assessing Terrorist Use of Chemical and Biological Weapons* (Cambridge, MA: MIT Press, 2000); Masaki Sugishima, "Biocrimes in Japan," in Masaki Sugishima, ed., *A Comprehensive Study on Bioterrorism* (Gifu, Japan: Asahi University, 2003); Tim Ballard et al., "Chronology of Aum Shinrikyo's CBW Activities," Center for Nonproliferation Studies (15 March 2001), www.cns.miis.edu/reports/pdfs/aum_chrn.pdf; and Amy Smithson, "Ataxia: The Chemical and Biological Terrorism Threat and the US Response," Henry L. Stimson Center (9 October 2000).

212. The most readily available public source on the Australian Federal Police investigation is a summary article "compiled" by an AFP Media and Public Relations official and published on an Internet site, "Cult Information and Family Support." The site was intended to help families whose members were co-opted or kidnapped by cults. Richard Crothers, "Police in Australia – Issues and Innovations in Australian Policing (Case Studies): The AFP Investigation into Japanese Sect Activities in Western Australia" (1 January 2008), www.cifs.org.au/doomsday.php. Consistent with its authorship by a public relations official, the summary article seems intended to enhance the reputation of the AFP. For example, the author writes, "This case study highlights the AFP's significant achievement in policing at an international level." The information published there, however, is consistent with other documents provided by the AFP, including to a U.S. congressional investigation of Aum. United States Senate, Permanent Subcommittee on Investigations, *Hearings on Global Proliferation of Weapons of Mass Destruction: A Case Study of the Aum Shinrikyo,* October 31, 1995 (Washington: U.S. Government Printing Office, 1996).

213. Interview with Tomomasa Nakagawa (12 October 2010).

214. Richard Crothers, "Police in Australia – Issues and Innovations in Australian Policing (Case Studies): The AFP Investigation into Japanese Sect Activities in Western Australia" (1 January 2008), www.cifs.org.au/doomsday.php.

215. Interview with Naruhito Noda (30 March 2010).

216. The underlying science was newly developed and is presented in Robin Black et al., "Application of Gas Chromatography-Mass Spectrometry and Gas Chromatography-Tandem Mass Spectrometry to the Analysis of Chemical Warfare Samples, Found to Contain Residues of the Nerve Agent Sarin, Sulphur Mustard and Their Degradation Products," *Journal of Chromatography*, 662 (1994): 301–321.

217. Richard Crothers, "Police in Australia – Issues and Innovations in Australian Policing (Case Studies): The AFP Investigation into Japanese Sect Activities in Western Australia" (1 January 2008), www.cifs.org.au/doomsday.php. As discussed earlier, the Japanese police found IMPA as well as MPA at Aum's Japanese production facility.

218. These quotations are drawn from emails from Peter Haaland to Terrance Leighton and Richard Danzig (2 June 2011).

219. "Nerve Agent: GB (Sarin)," CBWInfo.com, www.cbwinfo.com/Chemical/Nerve/GB.shtml, accessed on 31 May 2011; and Jonathan Tucker, *War of Nerves: Chemical Warfare from World War I to Al-Qaeda* (New York: Anchor Books, 2006): 24–41.

220. Kim Coleman, *A History of Chemical Warfare* (New York: Palgrave Macmillan, 2005): 52, 170.

221. Jonathan Tucker, *War of Nerves: Chemical Warfare from World War I to Al-Qaeda* (New York: Anchor Books, 2006): 83–102.

222. Jonathan Tucker, *War of Nerves: Chemical Warfare from World War I to Al-Qaeda* (New York: Anchor Books, 2006): 333–350.

223. Masaaki Sugishima, "Aum Shinrikyo and the Japanese Law on Bioterrorism," *Prehospital and Disaster Medicine* 18, 3 (2003): 181.

224. United States Senate, Permanent Subcommittee on Investigations, *Hearings on Global Proliferation of Weapons of Mass Destruction: A Case Study of the Aum Shinrikyo,* October 31, 1995 (Washington: U.S. Government Printing Office, 1996): 29–30.

225. Jonathan Tucker, *War of Nerves: Chemical Warfare from World War I to Al-Qaeda* (New York: Anchor Books, 2006): 340.

226. Jonathan Tucker, *War of Nerves: Chemical Warfare from World War I to Al-Qaeda* (New York: Anchor Books, 2006): 340.

227. Anthony T. Tu, "Toxicological and Chemical Aspects of Sarin Terrorism in Japan in 1994 and 1995," *Toxin Reviews* (formerly *Journal of Toxicology: Toxin Reviews*) 26, 3 (July 2007): 254.

About the Center for a New American Security

The mission of the Center for a New American Security (CNAS) is to develop strong, pragmatic, and principled national security and defense policies. Building on the expertise and experience of its staff and advisors, CNAS aims to engage policymakers, experts and the public with innovative fact-based research, ideas, and analysis to shape and elevate the national security debate. A key part of our mission is to help inform and prepare the national security leaders of today and tomorrow.

CNAS is located in Washington, D.C., and was established in February 2007 by Co-founders Kurt M. Campbell and Michèle A. Flournoy. CNAS is a 501(c)3 tax-exempt nonprofit organization. Its research is nonpartisan; CNAS does not take specific policy positions. Accordingly, all views, positions, and conclusions expressed in this publication should be understood to be solely those of the authors.

© 2011 Center for a New American Security.

All rights reserved.

Center for a New American Security
1301 Pennsylvania Avenue, NW
Suite 403
Washington, DC 20004

TEL 202.457.9400
FAX 202.457.9401
EMAIL info@cnas.org
www.cnas.org

Production Notes

Paper recycling is reprocessing waste paper fibers back into a usable paper product.

Soy ink is a helpful component in paper recycling. It helps in this process because the soy ink can be removed more easily than regular ink and can be taken out of paper during the de-inking process of recycling. This allows the recycled paper to have less damage to its paper fibers and have a brighter appearance. The waste that is left from the soy ink during the de-inking process is not hazardous and it can be treated easily through the development of modern processes.

PRINTED WITH SOY INK™

STRONG, PRAGMATIC AND PRINCIPLED
NATIONAL SECURITY AND DEFENSE POLICIES

1301 Pennsylvania Avenue, NW
Suite 403
Washington, DC 20004

TEL 202.457.9400
FAX 202.457.9401
EMAIL info@cnas.org

www.cnas.org

ISBN 978-1-935087-50-2

Printed on Post-Consumer Recycled paper with Soy Inks